Parts Catalogue

Engine No. 187993-UP

MITSUBISHI DIESEL ENGINE
L3E-V363JG

July 2008

MITSUBISHI HEAVY INDUSTRIES, LTD. Pub.No. 98615-MW100

MITSUBISHI GENUINE PARTS

"MITSUBISHI GENUINE PARTS" should be used exclusively for servicing your Mitsubishi engine.

"MITSUBISHI GENUINE PARTS" are superior and reliable because they have been produced under the excellent quality-control system, and have passed the strict inspections.

Imitation parts are not reliable from the viewpoints of their material and manufacturing method which are entirely incomparable with those of genuine parts.

A large assortment of "MITSUBISHI GENUINE PARTS" is always available at any of our authorized dealers, so do your ordering at your nearest dealer by specifying "MITSUBISHI GENUINE PARTS".

Pub.No.98615-MW100

MVDE/SSPI 0 2 1 .11

GUIDE FOR USE OF PARTS CATALOGUE

1. This Parts Catalogue contains service parts for the following Mitsubishi L3E diesel engine. Then applicable engine type and serial number are as follows:

ENGINE NAME	MODEL	USE·SPECIFICATION	APPLICABLE SERIAL NO.
L3E	V363JGH	For Generator	187993-UP

2. When ordering parts, give the Mitsubishi dealer or distributor the following information:
   (1) Part number (or assembly number) and part name.
   (2) Quantity required
   (3) Model and serial number
   NOTE: In some cases, a substitute part is furnished instead of the part ordered.

3. Indication of assembled bolts with washer
   Of the standard bolts, those with washers are identified by the symbol "B/W" in the Description column of each list. (Part Name: BOLT,W/WASHER)
   For the part numbers of the bolts, washers and those of bolts with washers, refer to the listing (beginning with the page D1) at the end of this parts catalogue. These bolts and washers should be ordered individually.

4. For the numerical index, refer to the page beginning with C1 at the end of this parts catalogue.

5. Some illustration may have some difference from the shape of real part when the illustration Shows a representation of various parts.

6. The parts and part numbers are subject to change without prior notice.

SAMPLE OF PARTS CATALOGUE

Group number

Group name

01-01 CRANKCASE

Model type

When these column is blank, it is applicable from serial No. shown on cover and up.

Not applicable to the model of this column.

REF. -NO.		PART NO.	R/P	SEQ	SCN G	PART NAME & DESCRIPTION		MODEL&QTY L3E			APPLICABLE SERIAL NO. FROM@	-@UPTO	M/R	VRD
1		32507-70010				CRANKCASE ASSY		1						
1	01	F2846-14000				PIN,DOWEL		1					A	
1	02	32507-01400				WASHER		1					A	
1	03	*				CAP,MAIN BEARING		6						
1	04	*				CAP,MAIN BEARING		1						
1	05	*				CRANKCASE		1						
2		32507-02500			C	HANGER	B10,B13	1				-011285		
		32507-02700	N	1		HANGER	B10,B13	1			011286-			V
3		32507-04100			Q	SHIM	T=0.5	*				@011294		
		32507-04100		1		SHIM	T=0.5	1			011295@			
4		F1805-10025				BOLT,W/WASHER	B/W	8					A	

See(8)-(a)Description Codes.

Quantity per unit.

High-demand part. See(11).

Part not to be Supplied. See(3).

See(8)-(c)Specification codes.

Applicable from serial No. indicated.

Applicable from 011295 (Scheduled)if suffixed with @ and sometimes differs from real serial No.

Part newly changed or added. See (12).

See(8)-(b)Description.

See(2)Reference number.

See(6)Change codes.

Applicable up to 011294 (Scheduled)if prefixed with @ and sometimes differs from real serial No.

See(4)Interchangeability codes.

See(5)Sequence-of-change numbers.

Applicable up to serial No. indicated.

NOTE: Some of model designations, number of variations and serial numbers, indicated above, are quoted from other parts catalogues.
Read these items of information as those for this parts catalogue.

NOTE: For the description of each item, refer to the pages which follow.

HOW TO USE THIS PARTS CATALOGUE
(to be referred to together with the former SAMPLEOF PARTS CATALOGUE)

(1)

01 CYLINDER HEAD

- 3-

REF. -NO.		PART NO.	R/P	SCENQG	PART NAME & DESCRIPTION		MODEL & QTY L3E			APPLICABLE SERIAL NO. FROM@-	-@UPTO	M/R	VRD
1		MM432239			HANGER, ENGINE		2						
2		30L01-21090			HEAD ASSY, CYLINDER		1						
2	01	*			MOUTH PIECE		3						
2	02	*			HEAD, CYLINDER		1						
2	03	MD000427			CAP, SEALING		1						
(2)		(3)	(4)	(5) (6)	(7)	(8)	(9)			(10)		(11)	(12)

The items (1) thru (12) are as described below:

(1) Compiling system

The systems of a unit are grouped according to their location in the unit. The groups, each identified by group number, are listed in the order by CONTENTS. Each group is preceded by an "exploded view" which clearly illustrates each part in its correct relation to the other parts in the illustration.

(2) Reference number

Abbreviated to "REF. No., "this number is used to locate a part in the illustration. In cases that the reference number is of three to four digits, the first and second digits show the reference number of an assembly, and the last two digits show the numbers of its component parts.

(3) Part numbers

The part numbers shown in this parts catalogue are those assigned to genuine Mitsubishi parts.

NOTE: Parts with asterisk (*) are not supplied individually.

(4) Interchangeability codes

The interchangeability codes used in this parts catalogue are as follows:

PART NO.	Code (R / P)	DESCRIPTION
A(Old) B(New)	R	B(new part) and A(old part) are mutually interchangeable
A(Old) B(New)	1	A(Old part) is not supplied.B(new part) can be substituted for A(Old part).
A(Old) B(New)	3	B(new part) can be substituted for A(old part). [A(old part) cannot be substituted for B(new part).]
A(Old) B(New)	N	B(new part) and A(old part) are not interchangeable.
A(Old) B(New)	G	B(new part) can be substituted for A(old part) in combination with other part(s). (For the parts to be combined, refer to the listing beginning with the page E1 at the end of this parts catalogue.)

(5) Sequence-of-change numbers

The parts are changed for improved quality or performance. Their changes are indicated in sequence by numerals (1. 2. 3...).

Blank : Original

1 : 1st change

2 : 2nd change

3 : 3rd change

(6) Change codes

These codes indicate the reason or purpose of changes of the parts.

A : Added part (a part entered into service)

C : Change of part number

D : Deleted part (a part applicable up to the serial no. expressed in Serial No. column)

E : Added part except above reasons

Q : Change of quantity

(7) Part name

Abbreviations are sometimes used. For the abbreviations, refer to TABLE OF SYMBOLS & ABBREVIATIONS appeared in hide pages of this general information chapter.

NOTE: The location termsLH (left hand) and RH (right hand) are as these directions viewed from the flywheel side of an engine.

(8) Description & Abbreviation codes

(a) Description codes (expressed in the first part of Description column).

B/W: Assembled bolt (with washer)

KIT: Part supplied as a kit

STD: Standard part

OPT: Optional part

AR : Part used, as required or by selection or in adjust quantity for necessity

SFN: Semi-finished part

(b) The Description codes in above paragraph (a) are followed by supplementary explanation such as dimensions (thickness, length, etc.) ,manufacturer part number, manufacturer name, etc. as occasion demands.

NOTE: Unless otherwise indicated, the dimensions are shown in millimeter and the name of unit is abbreviated.

(Examples) Thickness: T=1.00 Length: L=1000

Width: W=1500 Height: H=500

(c) Specification codes

Each specification or type of model, and selective specifications of a unit are indicated by codes of three digits. For these codes, refer to LIST OF SPECIFICATION CODES appeared in hind pages of this general information chapter.

NOTE: Unless indicated by the specification codes, the parts may be used for the products of all specifications.

(Examples) A10: For diesel fuel

B10: With industrial electric starter

(d) The parts indicated as "NOT SHOWN", such as component parts of overhaul gasket kit, are not shown in the illustration.

(9) Model & quantity

(a) Model : Model, type, specification, destination, etc. of product to which a parts catalogue applies are indicated in the title column of each variation.

(b) Quantity : Quantity of part or assembly, and its component parts required for one unit of product is indicated.

NOTE : In case "AR" appears in QTY column, it is required to adjust quantity for use.

(10) Applicable serial numbers

Applicable serial numbers of engine are indicated in the "UPTO" or "FROM" column. Serial numbers with "@" are scheduled ones and sometimes differ from the real serial numbers. If the "FROM " column is blank, the part is applicable to serial number shown on this cover and up.

(11) Management rank

The parts ranked as "A" are high-demand parts. This ranking is to be referred to by dealers, and is devised to facilitate and rationalize their distribution, stocking and inventory of the parts.

(12) The parts changed or added after the last parts list that has been published are identified by "V."

TABLE OF SYMBOLS & ABBREVIATIONS

SYMBOL	DESCRIPTION	
ACCEL	ACCELERATOR	
ADJ	ADJUSTING	
	(ADJUSTABLE)	
AIR-CON	AIR-CONDITIONER	
ASSY	ASSEMBLY	
ATT	ATTACHMENT	
AUTO	AUTOMATIC	
AUX	AUXILIARY	
AR	AS REQUIRED	
B/H	BACKHOE	
BATT	BATTERY	
BRG	BEARING	
B/PMP	BILGE PUMP	
BRKT	BRACKET	
BUSH	BUSHING	
CARB	CARBURETOR	
C/L	CENTERLINE	
COMPR	COMPRESSOR	
CON-ROD	CONNECTING-ROD	
C/MBR	CROSS-MEMBER	
CYL	CYLINDER	
DIA	DIAMETER	
DIFF	DIFFERENTIAL	
DISTR	DISTRIBUTOR	
DR	DRIVE	
D=	OUT DIAMETER	

SYMBOL	DESCRIPTION	
ELEC	ELECTRIC	
ENG	ENGINE	
EQUIP	EQUIPMENT	
EXH	EXHAUST	
E/TNK	EXPANSION TANK	
FITT	FITTING	
FLEX	FLEXIBLE	
FR	FRONT	
GSKT	GASKET	
GEN	GENERATOR	
GOV	GOVERNOR	
G/N	GROUP NUMBER	
H/EXCH	HEAT EXCHANGER	
HEX	HEXAGON	
HYD	HYDRAULIC	
H=	HEIGHT	
IND	INDUSTRIAL	
INJ	INJECTION	
INSTAL	INSTALLATION	
INST	INSTRUMENT	
INTLK	INTERLOCK	
JUNC	JUNCTION	
KD	KNOCKDOWN	
L.H	LEFT HAND	
LUB	LUBRICATION	
L=	LENGTH	

TABLE OF SYMBOLS & ABBREVIATIONS

SYMBOL	DESCRIPTION
MANF	MANIFOLD
MAX	MAXIMUM
M.L.H	MAXIMUM LIFTING HEIGHT
MIN	MINIMUM
MTR	MOTOR
MTG	MOUNTING
NO.	NUMBER
OPT	OPTION
O/D	OVER DRIVE
O.S	OVERSIZE
PTO	POWER TAKE-OFF
P/S	POWER STEERING
PRESS	PRESSURE
P/N	PART NUMBER
QTY	QUANTITY
RAD	RADIATOR
RE	REAR
REG	REGULATOR
REV	REVERSE
R.H	RIGHT HAND
REF.NO.	REFERENCE
R/N	REFERENCE
S/PMP	SEA WATER PUMP
SECT	SECTION
S/MBR	SIDEMEMBER

SYMBOL	DESCRIPTION
STD	STANDARD
SUPT	SUPPORT
SYM	SYMBOL
SYNCH	SYNCHRONIZER
SYS	SYSTEM
TEMP	TEMPERATURE
TERM	TERMINAL
T/CONV	TORQUE-CONVERTER
T/F	TRANSFER
T/M	TRANSMISSION
T/HSG	TURBINE-HOUSING
T/C	TURBOCHARGER
T=	THICKNESS
U/BODY	UNDERBODY
U.S	UNDERSIZE
UNIV	UNIVERSAL
VAC	VACUUM
VENT	VENTILATOR
W/STRIP	WEATHERSTRIP
W/	WITH
W/O	WITHOUT
W/W	WOODWARD
W/PMP	WATER PUMP
W=	WIDTH
Z=	NUMBER OF GEAR TEETH

TABLE OF SYMBOLS & ABBREVIATIONS

SYMBOL	DESCRIPTION		SYMBOL	DESCRIPTION	
1ST	FIRST				
2ND	SECOND				
3RD	THIRD				
4TH	FOURTH				
5TH	FIFTH				
&	AND				
@	UNCONFIRMED				
*	PART NOT TO BE SUPPLIED				

MEMO

CONTENTS

GROUP NO.	GROUP NAME	PAGE
	ENGINE BODY	
01	CYLINDER HEAD	2
04	VALVE DRIVE	4
04-02	ROCKER COVER	6
05	CAMSHAFT	8
07	CRANKCASE	10
09	CRANKSHAFT BEARING	12
11	GEAR OR CHAIN CASE	14
12	FLYWHEEL HOUSING	16
13	OIL PAN	18
14	ENGINE SUPPORT	20
17	PISTON	22
19	CONNECTING ROD	24
20	CRANKSHAFT	26
21	FLYWHEEL	28
	INLET & EXHAUST SYSTEM	
30	MANIFOLD	30
30-03	AIR CLEANER	32
	OIL SYSTEM	
36	OIL SCREEN	34
36-04	OIL PRESSURE GAGE UNIT	36

GROUP NO.	GROUP NAME	PAGE
40	OIL FILTER	38
42	OIL FILLER & GAGE	40
43	BREATHER	42
	COOLING SYSTEM	
45	WATER PUMP	44
46	THERMOSTAT	46
46-02	WATER HOSE & PIPE	48
46-04	WATER TEMPERATURE GAGE UNIT	50
47-01	RADIATOR	52
48	FAN	54
49	DRIVE BELT	56
	FUEL SYSTEM	
60-01	FUEL PUMP	58
61	NOZZLE	60
61-02	FUEL INJECTION PIPE	62
61-06	FUEL PIPE	64
62	FUEL FILTER	66
63	GOVERNOR	68
65-00-01	INJECTION PUMP	70
65-00-02	INJECTION PUMP	72
65-02	FUEL INJECTION PUMP DRIVE	74
	STARTING SYSTEM	
66-00-01	STARTER	76

GROUP NO.	GROUP NAME	PAGE
66-00-02	STARTER (12V-1.7KW)	78
66-02	GLOW PLUG	80
68-00-01	GENERATOR	82
68-00-02	ALTERNATOR(12V-40A)	84
	CONTROL SYSTEM	
87	SPEED CONTROL	86
	REPAIR PARTS	
97	OVERHAUL GASKET KIT	88
	NUMERICAL PARTS INDEX	C1
	TABLE OF BOLT,W/WASHER	D1

MEMO

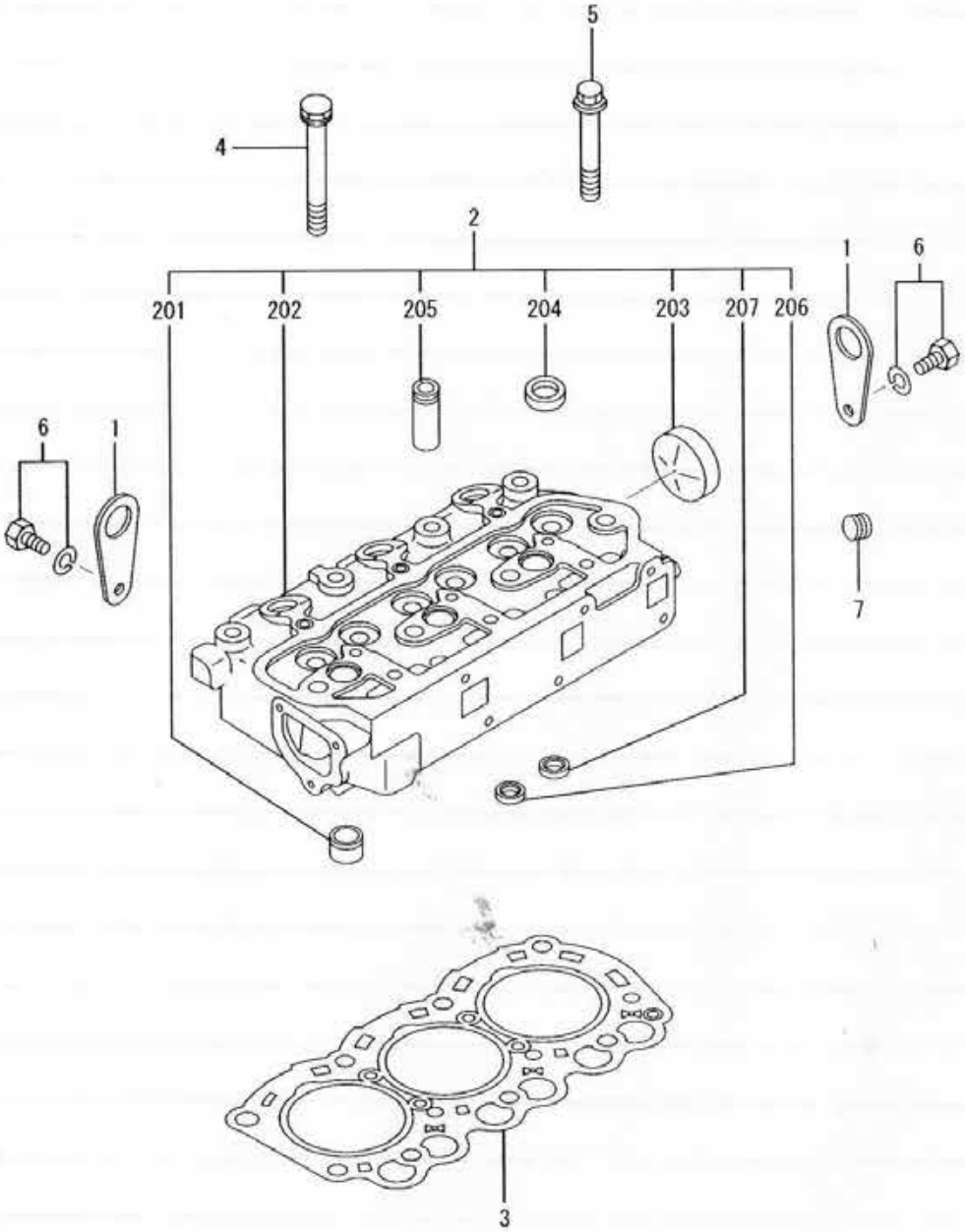
5
4
2
1
6
201
202
205
204
203
207
206
6
1
7
3

REF. -NO.		PART NO.	R/P	SCENQG	PART NAME & DESCRIPTION		MODEL & QTY L3E			APPLICABLE SERIAL NO. FROM@-	-@UPTO	M/R	VRD
1		MM432239			HANGER, ENGINE		2						
2		30L01-21090			HEAD ASSY, CYLINDER		1						
2	01	*			MOUTH PIECE		3						
2	02	*			HEAD, CYLINDER		1						
2	03	MD000427			CAP, SEALING		1						
2	04	MF665536			CAP, SEALING		3						
2	05	MM318306			GUIDE, VALVE		6						
2	06	MM433300			RING, VALVE SEAT	INTAKE	3						
2	07	MM433301			RING, VALVE SEAT	EXHAUST	3						
3		30L01-01102			GASKET, CYLINDER HEAD		1						
4		MM432-12501			BOLT, CYLINDER HEAD		8						
5		MD020566			BOLT, FLANGE		3						
6		MF240051			BOLT, W/WASHER		2					A	
7		MS661140			PLUG, TAPERED		1					A	

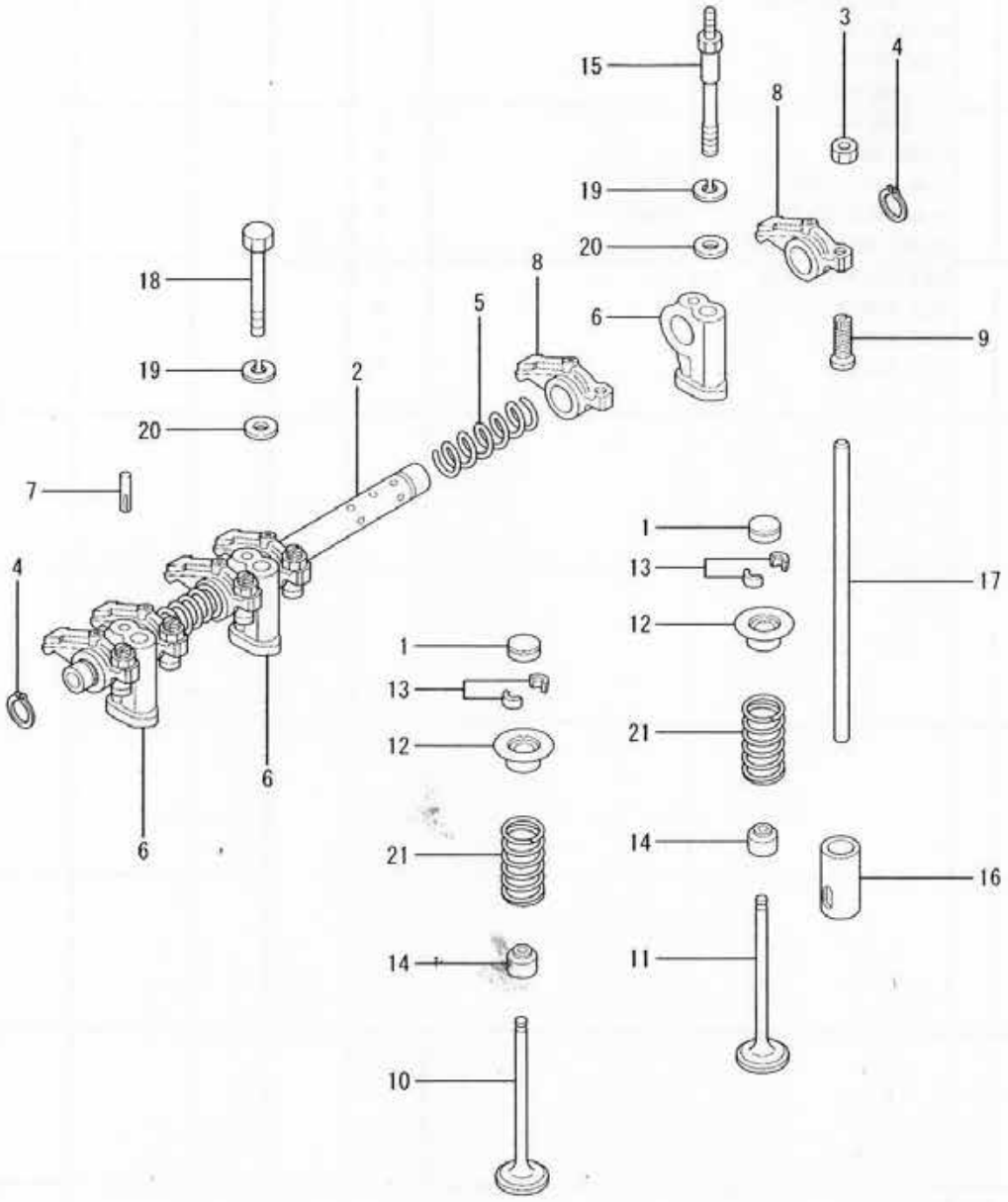

REF. NO. 13 COMES IN PAIRS.

REF. -NO.	PART NO.	R/P	SENQG	PART NAME & DESCRIPTION		MODEL & QTY L3E			APPLICABLE SERIAL NO. FROM@-	-@UPTO	M/R	VRD
1	31A04-00700			CAP, VALVE STEM		6					A	
2	30L04-00071			SHAFT ASSY, ROCKER		1						
3	F2305-06000			NUT		6					A	
4	MF522003			RING, SNAP		2					A	
5	MM318768			SPRING, ROCKER SHAFT		2					A	
6	MM318772			STAY, ROCKER		3						
7	MM432145			PIN, GROOVED		1						
8	30L05-01100			ARM, ROCKER		6						
9	MM433312			SCREW, ADJUSTING		6					A	
10	30L04-14600			VALVE, INTAKE		3						
11	30L04-24700			VALVE, EXHAUST		3						
12	MM433-30601			RETAINER, VALVE		6						
13	MD016483			LOCK, VALVE SPRING		12						
14	MD115472			SEAL, VALVE STEM		6					A	
15	30L05-03700			BOLT, ROCKER STAY		2					A	
16	MM434222			TAPPET		6						
17	MM433307			ROD, PUSH		6						
18	MF101267			BOLT		1					A	
19	MF450405			WASHER, SPRING		3					A	
20	MS450035			WASHER, PLAIN		3					A	
21	30L04-04500			SPRING, VALVE		6						

04-02 ROCKER COVER

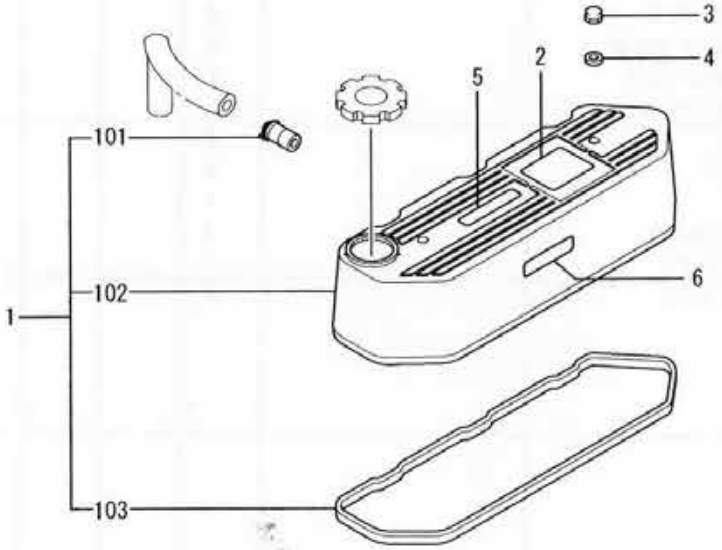

04-02 ROCKER COVER

REF. -NO.		PART NO.	R/P	SCENQG	PART NAME & DESCRIPTION		MODEL & QTY L3E			APPLICABLE SERIAL NO. FROM@-	-@UPTO	M/R	VRD
1		30L04-02011			COVER ASSY, ROCKER		1						
1	01	*			PIPE, BREATHER		1						
1	02	*			COVER, ROCKER		1						
1	03	MM433133			GASKET, ROCKER COVER		1						
2		*			LABEL, INDIA EMI.		1						
3		F2460-06000			NUT, CAP		2					A	
4		MF450004			WASHER, PLAIN		2					A	
5		*			LABEL, SERIAL NO.		1						
6		*			LABEL, IMPORT DATE		1						

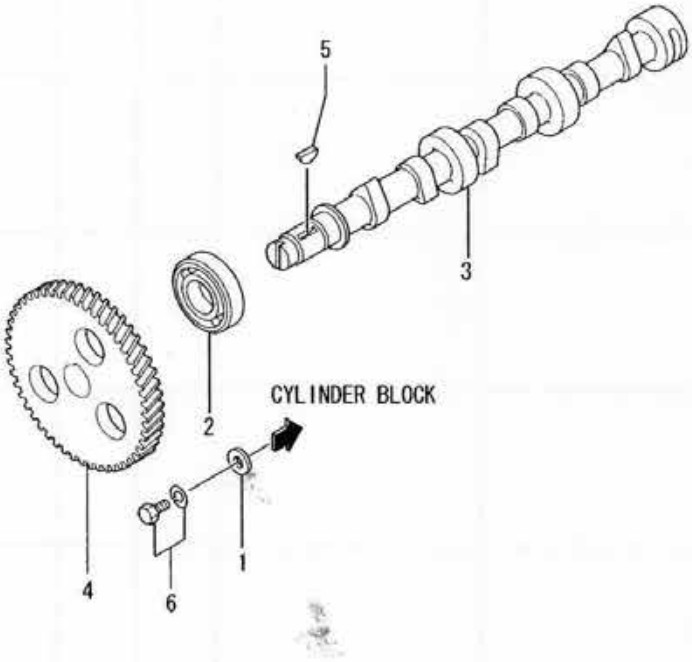
5
3
2
CYLINDER BLOCK
1
4
6

REF. -NO.		PART NO.	R/P	SCENQG	PART NAME & DESCRIPTION		MODEL & QTY L3E			APPLICABLE SERIAL NO. FROM@-	-@UPTO	M/R	VRD
1		MM432306			WASHER, CAMSHAFT STOP		1					A	
2		MM432105			BEARING, BALL		1					A	
3		MM433-19702			CAMSHAFT		1						
4		MM432890			GEAR, CAMSHAFT	Z=52	1						
5		MF476214			KEY, WOODRUFF		1						
6		MF241223			BOLT, W/WASHER		1					A	

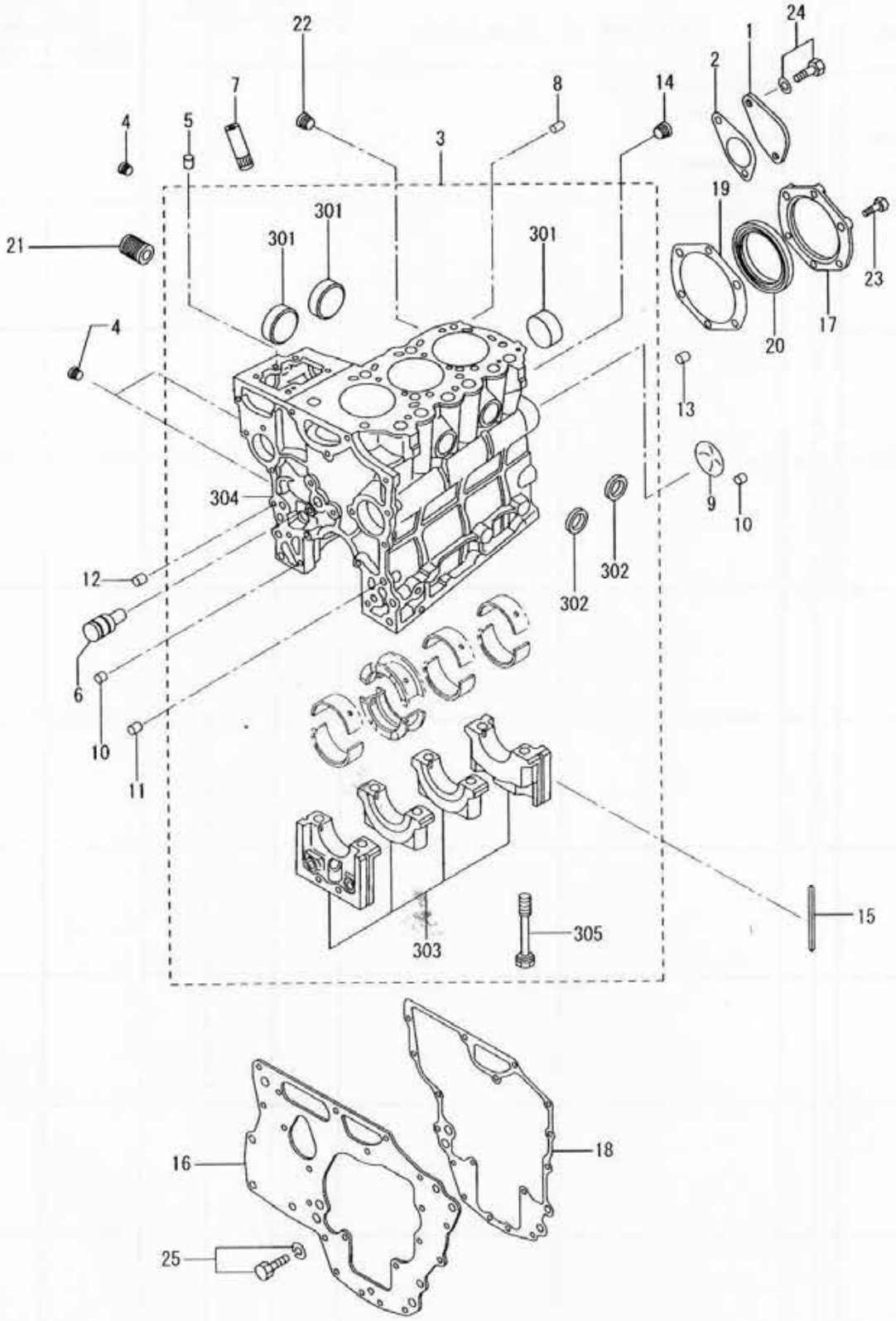
22
24
1
2
7
8
14
4
5
3
19
301
301
301
21
23
4
20
17
13
304
9
10
12
302
302
6
10
11
15
303
305
16
18
25

REF. NO.	PART NO.	R/P	SCENQG	PART NAME & DESCRIPTION		MODEL & QTY L3E			APPLICABLE SERIAL NO. FROM@-	-@UPTO	M/R	VRD
1	MM432677			COVER		1						
2	30L07-05101			GASKET		1					A	
3	MM433-77605			BLOCK SUB ASSY, CYL.		1						
3 01	MD000427			CAP, SEALING		3						
3 02	MF665538			CAP, SEALING		2						
3 03	*			CAP ASSY, BEARING		1						
3 04	*			BLOCK, CYLINDER		1						
3 05	30L07-01100			BOLT, BEARING CAP		8						
4	30L07-01800			PLUG, TAPERED		3						
5	MM409645			PIN, DOWEL		2					A	
6	MM433115			SHAFT, IDLER		1						
7	MM430613			GUIDE, OIL LEVEL GAGE		1						
8	MF472404			PIN, DOWEL		1					A	
9	MF665510			PLUG, EXPANSION		1					A	
10	MS471101			BUSHING, KNOCK		2						
11	MS471102			BUSHING, KNOCK		1						
12	MS471105			BUSHING, KNOCK		2						
13	MS471107			BUSHING, KNOCK		3						
14	MS661141			PLUG, TAPERED		1					A	
15	MM432214			SEAL, SIDE		4						
16	30L07-01200			PLATE, FRONT		1						
17	MM432065			CASE, OIL SEAL		1						
18	30L07-05300			GASKET, FRONT PLATE		1					A	
19	30L07-05201			GASKET, OIL SEAL CASE		1					A	
20	MD016317			SEAL, OIL REAR		1					A	
21	30L07-00700			SHAFT, OIL FILTER		1						
22	MD000269			PLUG, TAPERED		1					A	
23	MF101228			BOLT		6					A	
24	MF240051			BOLT, W/WASHER		2					A	
25	MF241224			BOLT, W/WASHER		7					A	

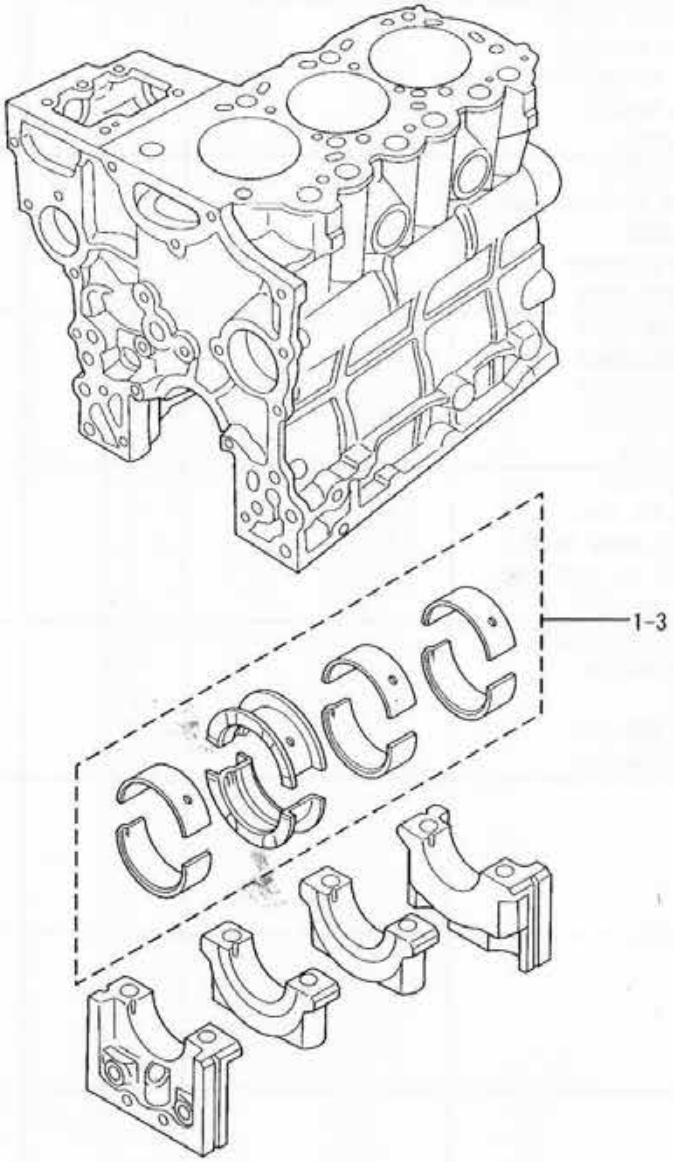
1-3

REF. -NO.	PART NO.	R / P	S C E N Q G	PART NAME & DESCRIPTION		MODEL & QTY L3E			APPLICABLE SERIAL NO. FROM@-	-@UPTO	M / R	V R D
1	MM438799			BEARING SET	STD	1					A	
2	MM438800			BEARING SET	U.S. 0.25	1					A	
3	MM438801			BEARING SET	U.S. 0.50	1					A	

11 GEAR OR CHAIN CASE

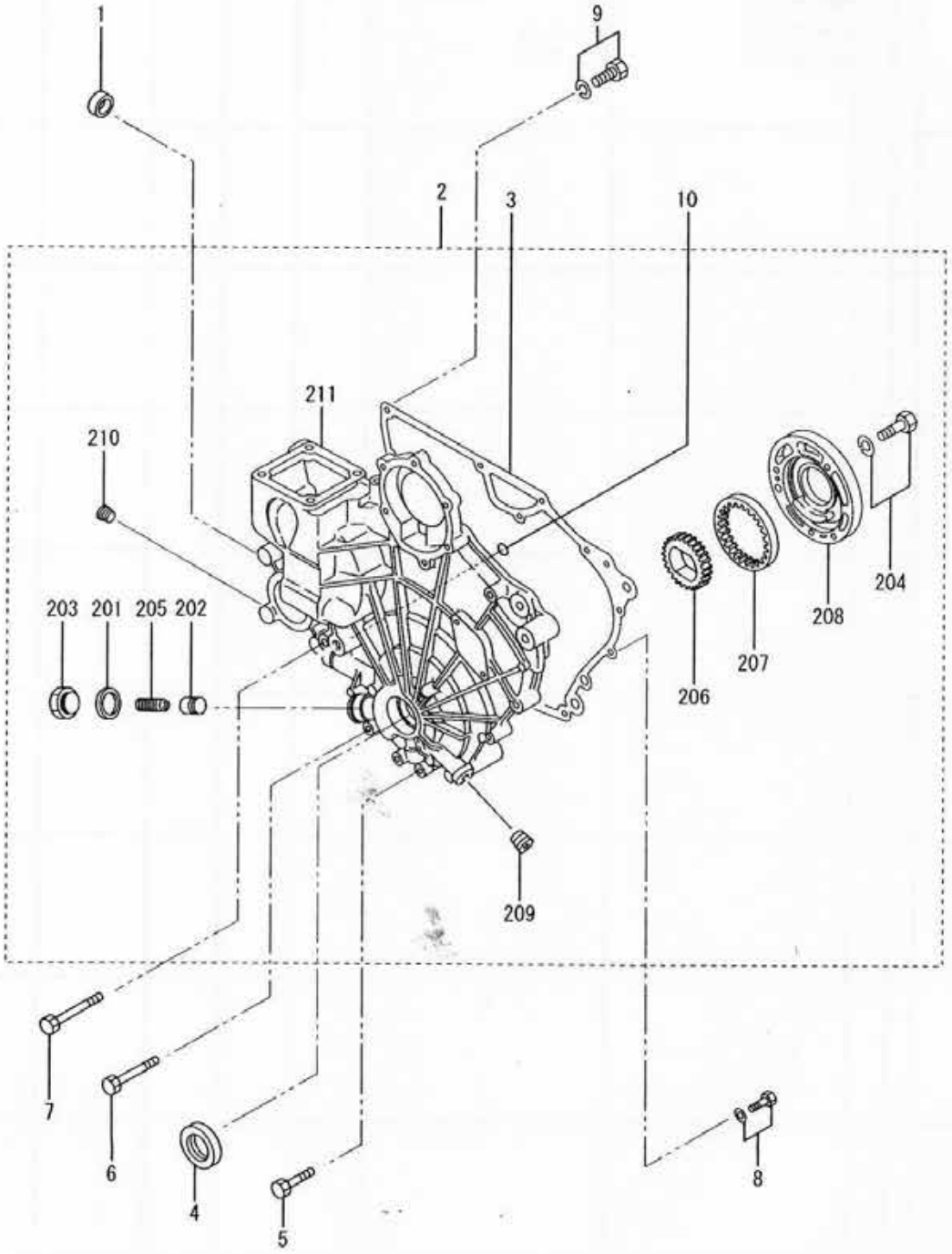

REF. -NO.		PART NO.	R/P	SCENQG	PART NAME & DESCRIPTION		MODEL & QTY L3E			APPLICABLE SERIAL NO. FROM@-	-@UPTO	M/R	VRD
1		MM432235			CAP, SEALING		1						
2		30L11-00034			CASE ASSY, GEAR		1						
2	01	MD000312			GASKET, OIL DRAIN		1					A	
2	02	MD001402			PLUNGER, RELIEF		1						
2	03	MD001404			PLUG, DRAIN		1					A	
2	04	MF241231			BOLT, W/WASHER		3					A	
2	05	MM433353			SPRING, RELIEF		1					A	
2	06	MM433793			GEAR, OIL PUMP INNER	Z=24	1						
2	07	MM433794			GEAR, OIL PUMP OUTER	Z=29	1						
2	08	MM434466			HOUSING, OIL PUMP		1						
2	09	MS661121			PLUG, TAPERED		1					A	
2	10	MS661140			PLUG, TAPERED		1					A	
2	11	*			CASE SUB ASSY, GEAR		1						
3		30L11-05101			GASKET, GEAR CASE		1					A	
4		MD008883			SEAL, OIL		1					A	
5		MF101235			BOLT		3					A	
6		MF101240			BOLT		4					A	
7		MF101242			BOLT		1					A	
8		MF241224			BOLT, W/WASHER		4					A	
9		MF240051			BOLT, W/WASHER		3					A	
10		MF520007			O-RING		2					A	

12 FLYWHEEL HOUSING

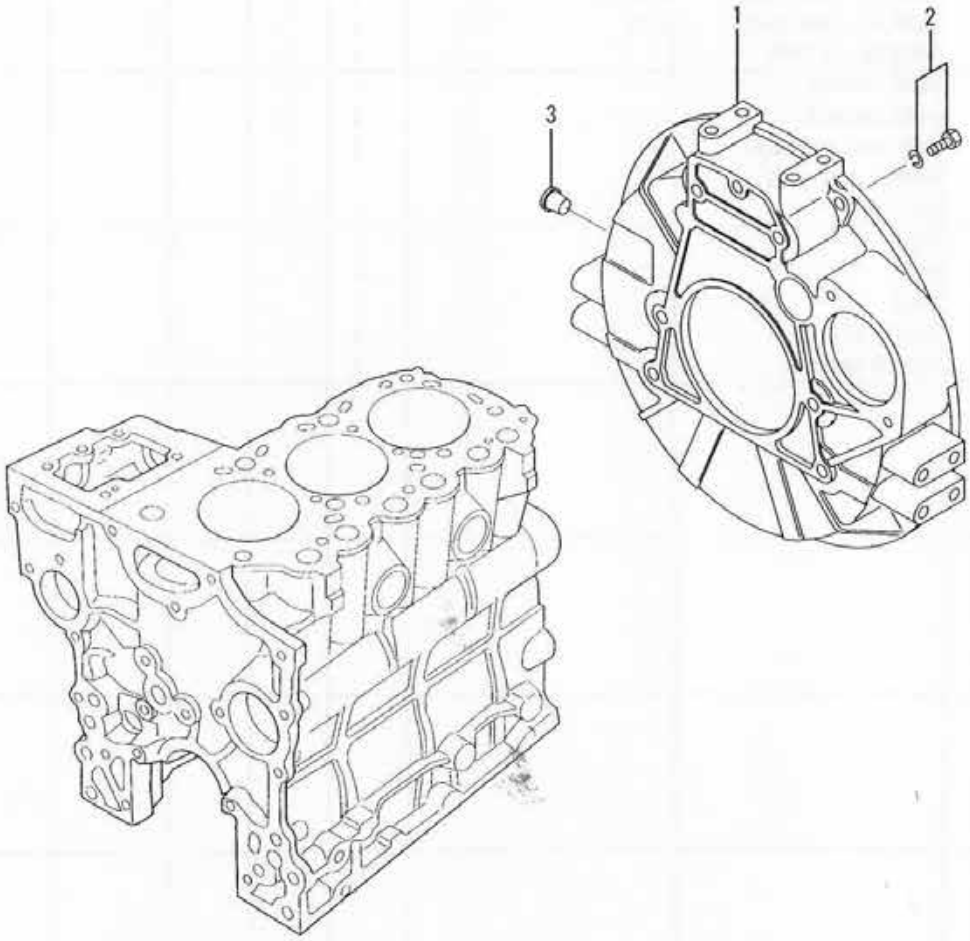

REF. -NO.	PART NO.	R/P	SCENQG	PART NAME & DESCRIPTION	MODEL & QTY L3E			APPLICABLE SERIAL NO. FROM@-	-@UPTO	M/R	VRD
1	MM437-435			HOUSING, FLYWHEEL	1						
2	MF241282			BOLT, W/WASHER	6					A	
3	05534-16000			PLUG	1					A	

13 OIL PAN

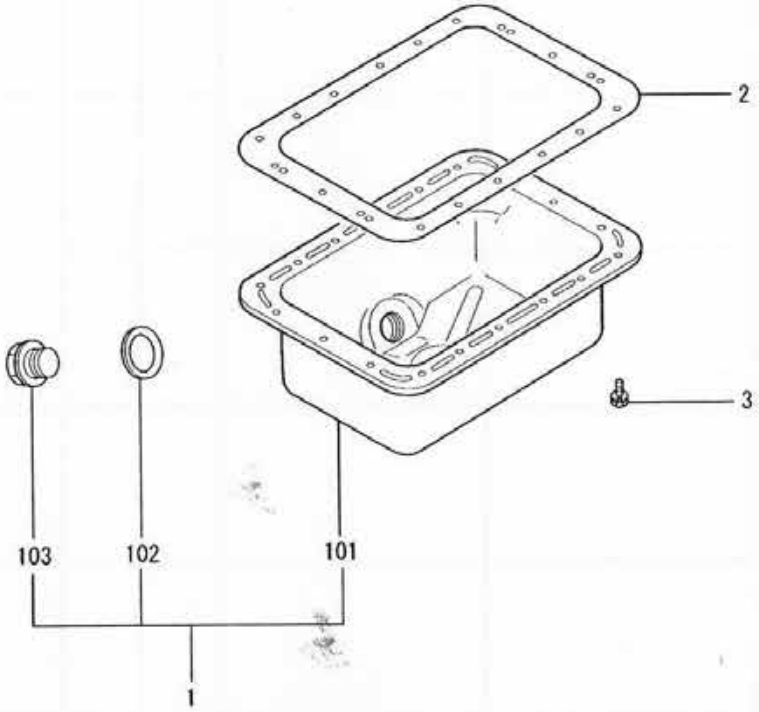

REF. -NO.		PART NO.	R/P	SCENQG	PART NAME & DESCRIPTION		MODEL & QTY L3E			APPLICABLE SERIAL NO. FROM@-	-@UPTO	M/R	VRD
1		MM437789			PAN ASSY, OIL		1						
1	01	*			PAN SUB ASSY, OIL		1						
1	02	MD000312			GASKET, OIL DRAIN		1					A	
1	03	MD000318			PLUG, OIL DRAIN		1					A	
2		30L13-05200			GASKET, OIL PAN		1					A	
3		MF241223			BOLT, W/WASHER		18					A	

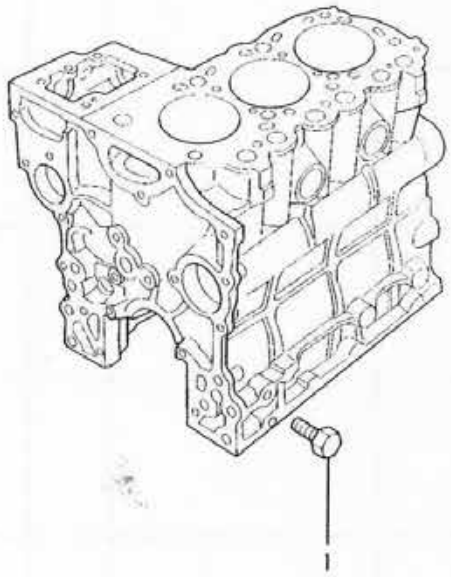

REF. -NO.	PART NO.	R/P	SCENQG	PART NAME & DESCRIPTION		MODEL & QTY L3E			APPLICABLE SERIAL NO. FROM@-	-@UPTO	M/R	VRD
1	MF100083			BOLT		4					A	

17 PISTON

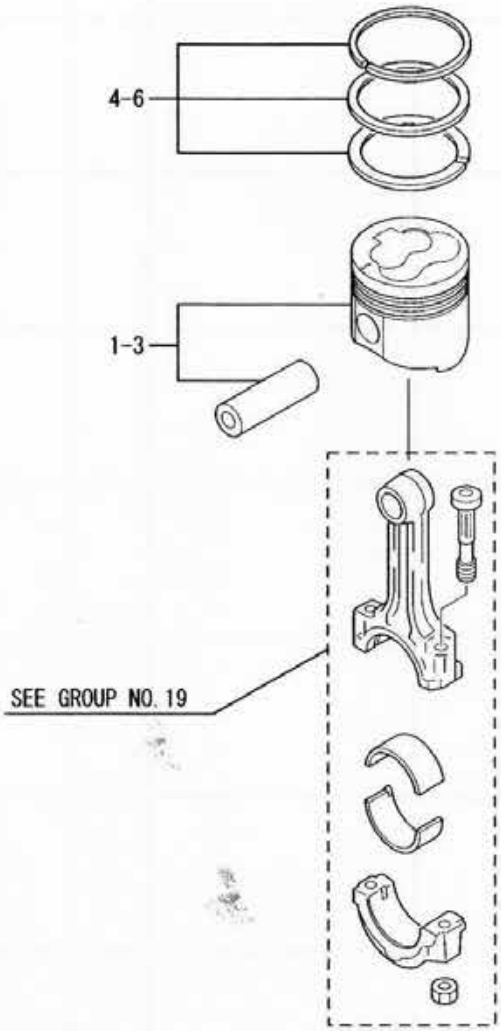

REF. -NO.		PART NO.	R/P	SCENQG	PART NAME & DESCRIPTION		MODEL & QTY L3E			APPLICABLE SERIAL NO. FROM@-	-@UPTO	M/R	VRD
1		30L17-10010			PISTON & PIN SET	STD	3					A	
2		30L17-10020			PISTON & PIN SET	0.S 0.25	3					A	
3		30L17-10030			PISTON & PIN SET	0.S 0.50	3					A	
4		MM433713			RING SET,PISTON	STD	3					A	
5		MM434344			RING SET,PISTON	0.S 0.25	3					A	
6		MM434345			RING SET,PISTON	0.S 0.50	3					A	

19 CONNECTING ROD

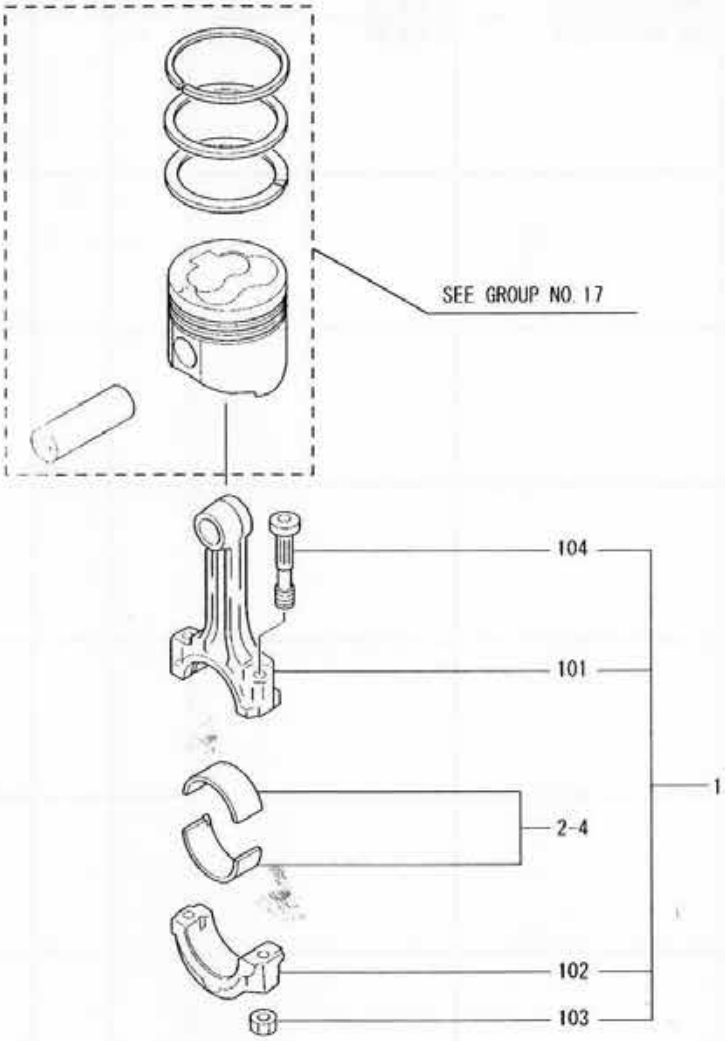

REF. -NO.		PART NO.	R/P	SCENQG	PART NAME & DESCRIPTION		MODEL & QTY L3E			APPLICABLE SERIAL NO. FROM@-	-@UPTO	M/R	VRD
1		30L19-00031			ROD ASSY, CONNECTING		3						
1	01	*			CONNECTING ROD		3						
1	02	*			CAP, CONNECTING ROD		3						
1	03	MD000704			NUT, CONNECTING ROD		6					A	
1	04	MD000705			BOLT, CONNECTING ROD		6					A	
2		30L19-02010			BEARING SET, CON-ROD	STD	3					A	
3		30L19-02020			BEARING SET, CON-ROD	U.S 0.25	3					A	
4		30L19-02030			BEARING SET, CON-ROD	U.S 0.50	3					A	

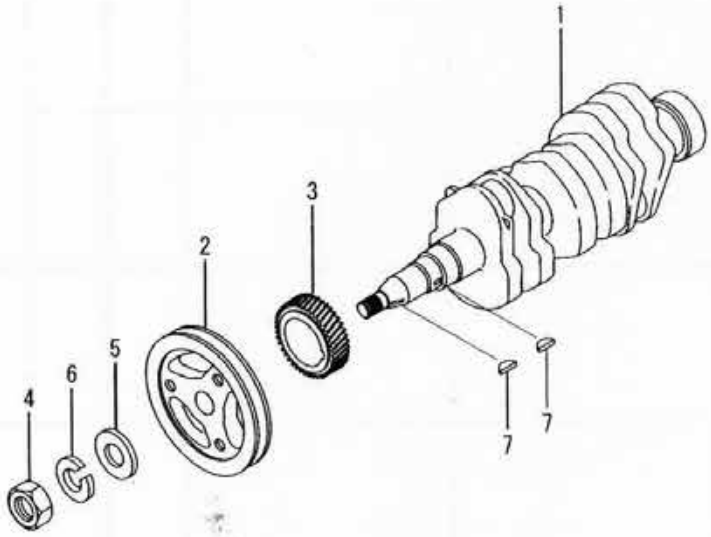
1
2
3
4
5
6
7
7

REF. -NO.	PART NO.	R/P	SCENQG	PART NAME & DESCRIPTION		MODEL & QTY L3E			APPLICABLE SERIAL NO. FROM@-	-@UPTO	M/R	VRD
1	30L20-00501			CRANKSHAFT		1						
2	30L20-01400			PULLEY, CRANKSHAFT		1						
3	MM432887			GEAR, CRANKSHAFT	Z=26	1						
4	MF430845			NUT, JAM		1					A	
5	MF450009			WASHER, PLAIN		1					A	
6	MF450409			WASHER, SPRING		1					A	
7	MF476214			KEY, WOODRUFF		2						

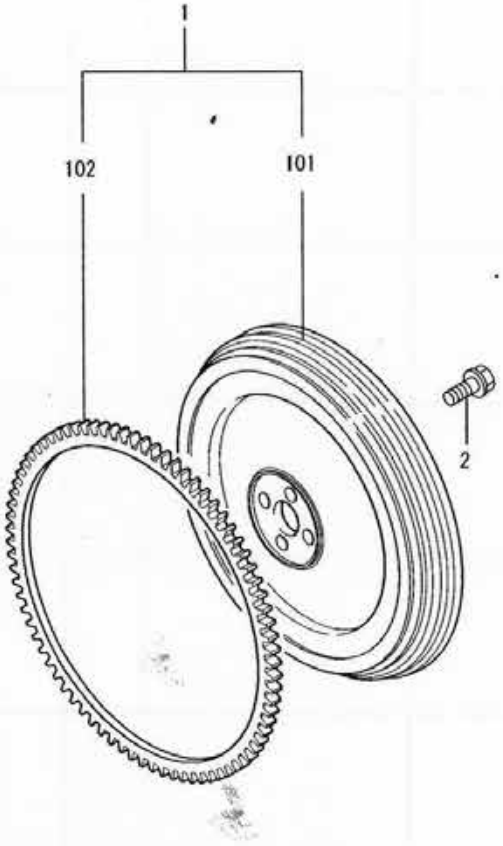
1
102
101
2

REF. -NO.	PART NO.	R/P	SCENQG	PART NAME & DESCRIPTION		MODEL & QTY L3E			APPLICABLE SERIAL NO. FROM@-	-@UPTO	M/R	VRD
1	30L21-02070			FLYWHEEL SUB ASSY		1						
1 01	*			FLYWHEEL		1						
1 02	MD030629			GEAR, RING	Z=106	1						
2	30L21-03500			BOLT, FLYWHEEL		4					A	

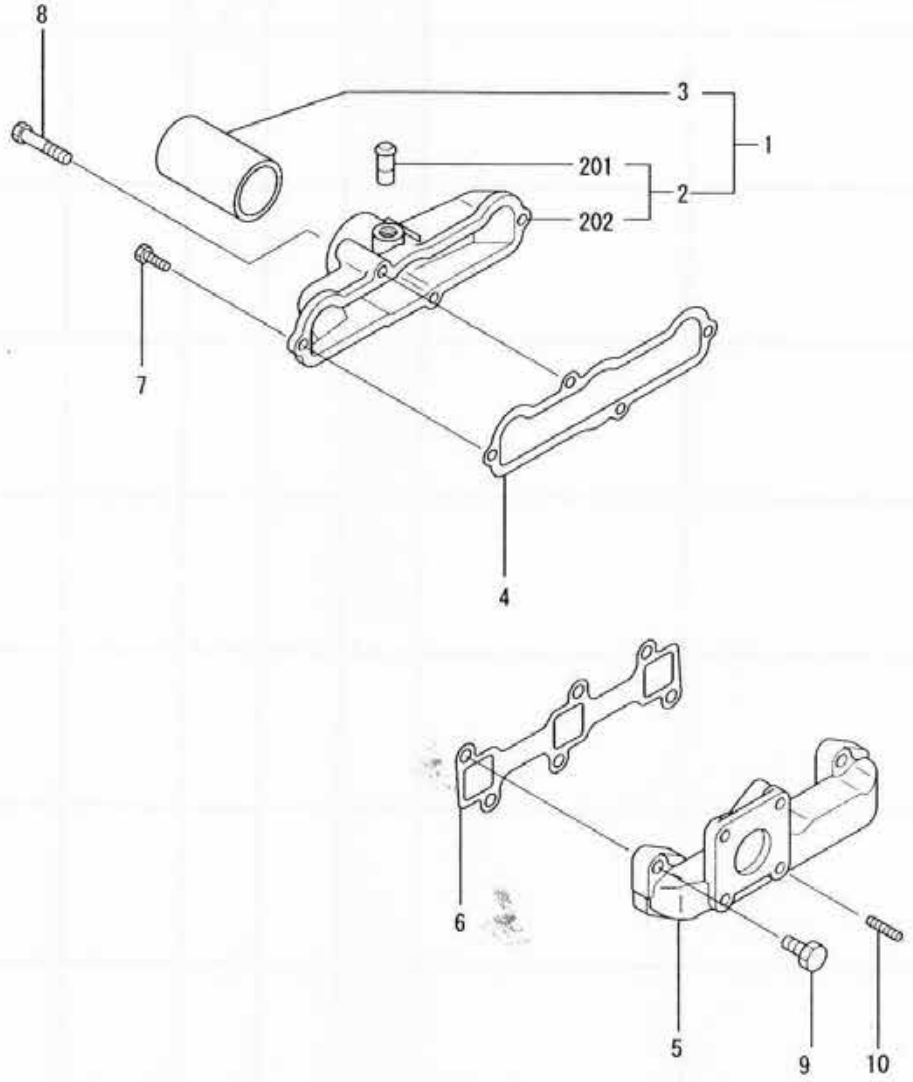
8
3
1
201
2
202
7
4
6
5
9
10

REF. -NO.		PART NO.	R/P	SCENQG	PART NAME & DESCRIPTION		MODEL & QTY L3E			APPLICABLE SERIAL NO. FROM@-	-@UPTO	M/R	VRD
1		MM435-47801			COVER ASSY, INTAKE		1						
2		MM433-13901			COVER SUB ASSY		1						
2	01	*			PIPE, BREATHER		1						
2	02	*			COVER, INTAKE		1						
3		MM432237			PIPE, INLET		1						
4		30L30-05201			GASKET, INTAKE		1					A	
5		MM433547			MANIFOLD, EXHAUST		1						
6		MM432-12901			GASKET, EXHAUST MANF		1					A	
7		MF101228			BOLT		2					A	
8		MF101238			BOLT		2					A	
9		MF101257			BOLT		6					A	
10		MF401936			STUD		4						

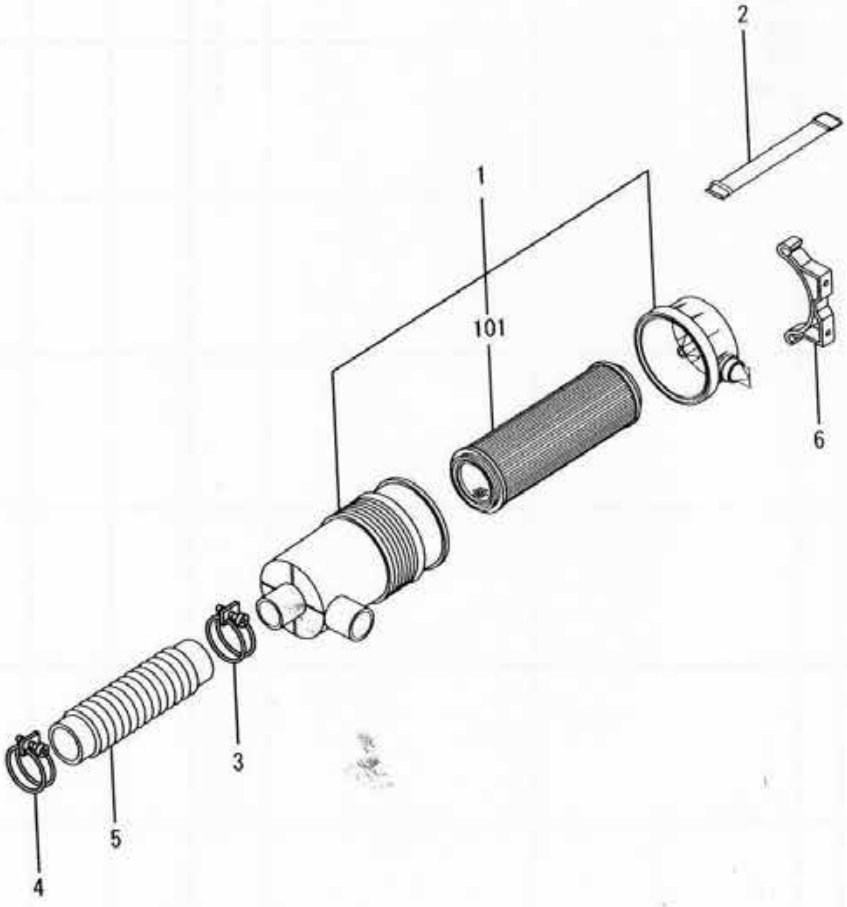
2
1
101
6
3
5
4

REF. -NO.		PART NO.	R/P	SCENQG	PART NAME & DESCRIPTION		MODEL & QTY L3E			APPLICABLE SERIAL NO. FROM@-	-@UPTO	M/R	VRD
1		31A30-03020			CLEANER ASSY, AIR		1						
1	01	31A30-03200			ELEMENT, AIR CLEANER		1						
2		31A30-03301			BAND, AIR CLEANER		1						
3		F4300-05701			CLAMP, HOSE		1					A	
4		F4300-04701			CLAMP, HOSE		1					A	
5		MM401322			HOSE, AIR		1						
6		31A30-03400			BRACKET, AIR CLEANER		1						

THIS PAGE IS NOT APPLICABEL. FOR CORRECT PART NO.REFER ATTACHED DRAWING NO. 30N96-02030

36 OIL SCREEN

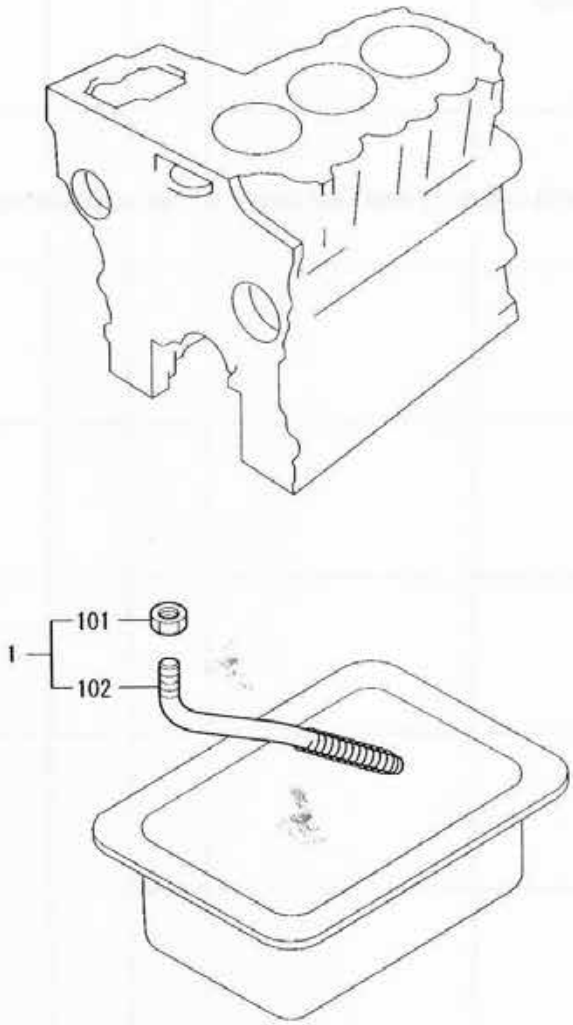

REF. -NO.		PART NO.	R/P	SCENQG	PART NAME & DESCRIPTION		MODEL & QTY L3E			APPLICABLE SERIAL NO. FROM@-	-@UPTO	M/R	VRD
1		MM433828			SCREEN ASSY, OIL		1						
1	01	MF430728			NUT, JAM		1					A	
1	02	*			SCREEN, OIL		1						

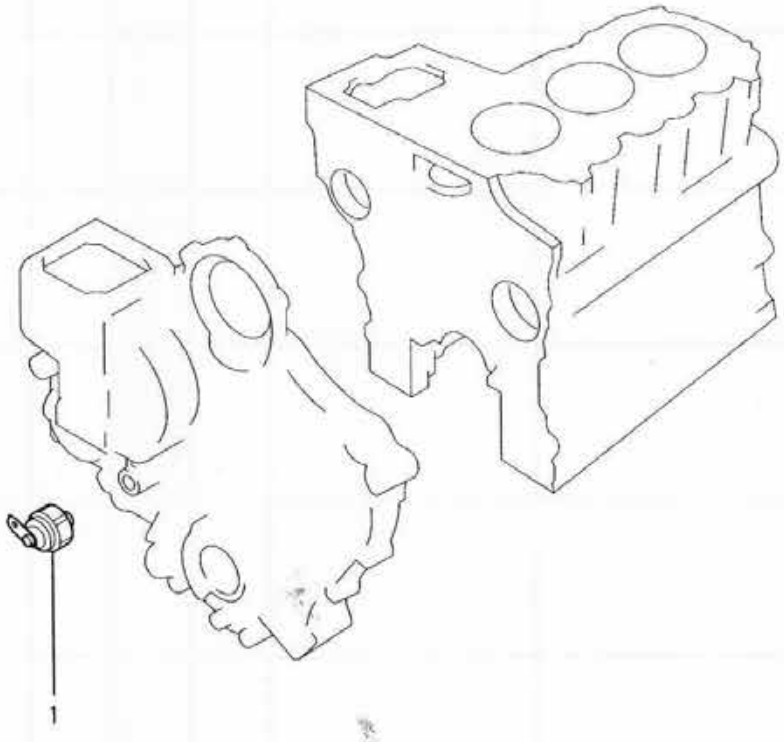
1

REF. -NO.		PART NO.	R/P	SCENQG	PART NAME & DESCRIPTION		MODEL & QTY L3E			APPLICABLE SERIAL NO. FROM@-	-@UPTO	M/R	VRD
1		31A90-00601			SWITCH, OIL PRESSURE		1						

40 OIL FILTER

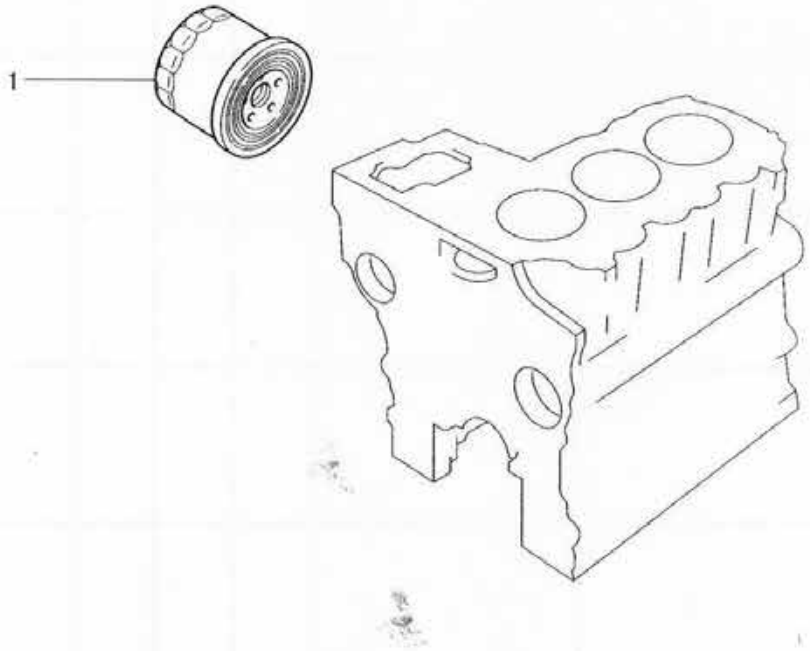

REF. -NO.	PART NO.	R/P	SCENQG	PART NAME & DESCRIPTION		MODEL & QTY L3E			APPLICABLE SERIAL NO. FROM@-	-@UPTO	M/R	VRD
1	30A40-00105			FILTER ASSY, OIL		1					A	

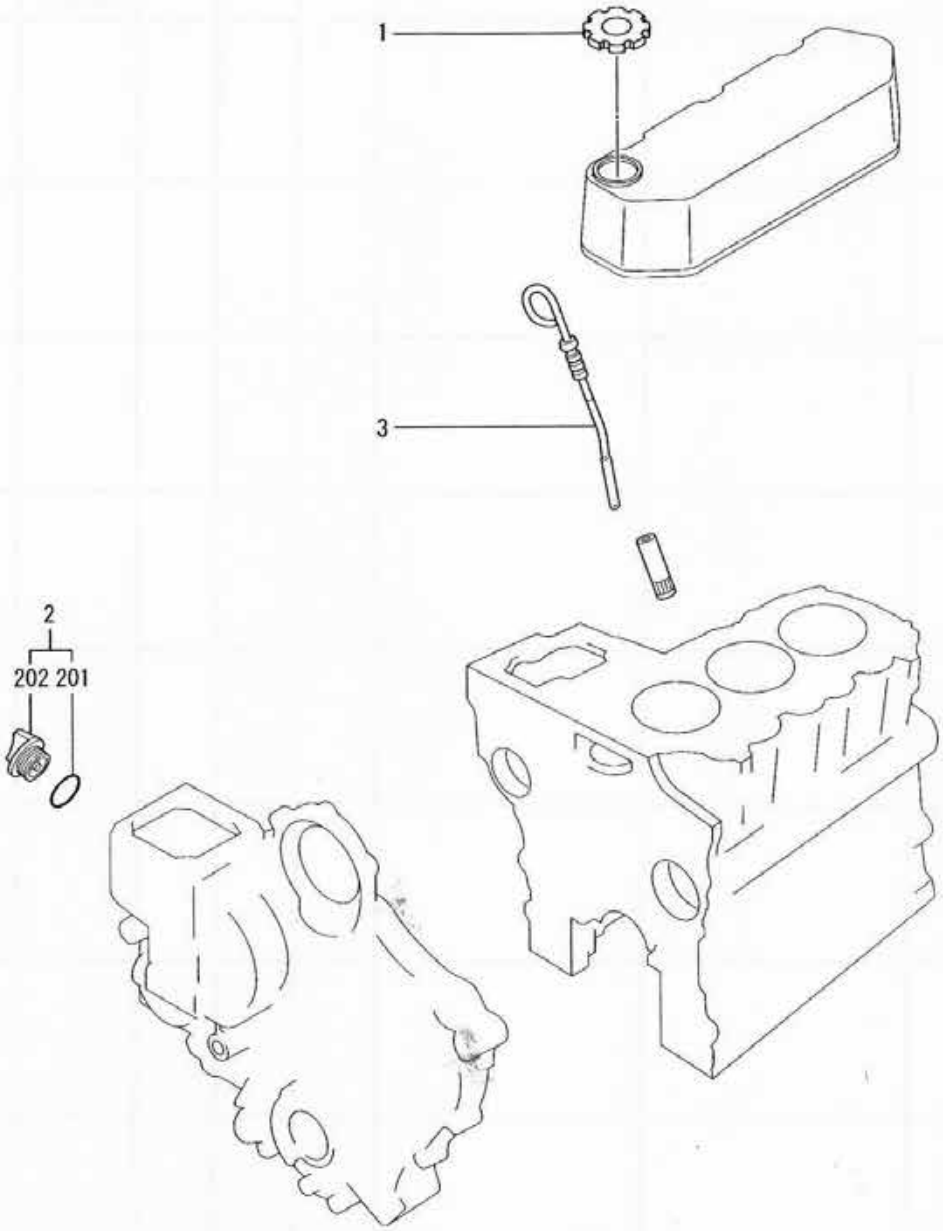
1
3
2
202 201

REF. -NO.		PART NO.	R/P	SCENQG	PART NAME & DESCRIPTION		MODEL & QTY L3E			APPLICABLE SERIAL NO. FROM@-	-@UPTO	M/R	VRD
1		31A42-01300			CAP, FILLER		1						
2		30H42-04020			CAP ASSY, OIL FILLER		1						
2	01	MF520402			O-RING		1					A	
2	02	*			CAP, OIL FILLER		1						
3		MM433120			GAGE, OIL LEVEL		1						

43 BREATHER

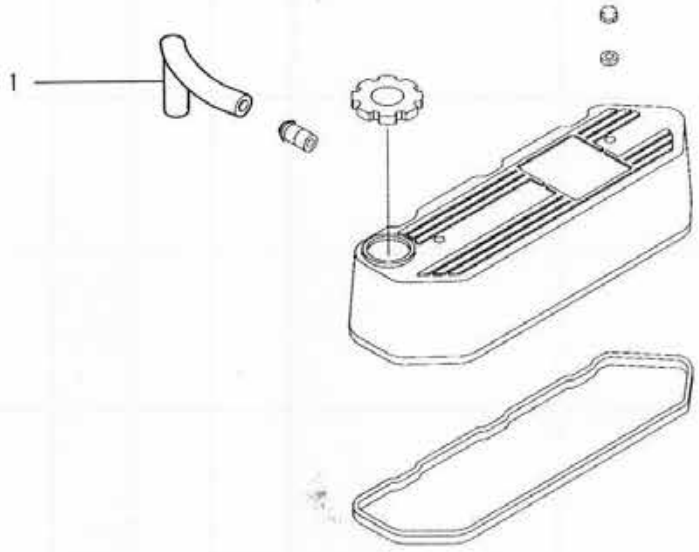

REF. -NO.		PART NO.	R/P	SCENQG	PART NAME & DESCRIPTION		MODEL & QTY L3E			APPLICABLE SERIAL NO. FROM@-	-@UPTO	M/R	VRD
1		MM433709			HOSE, BREATHER		1						

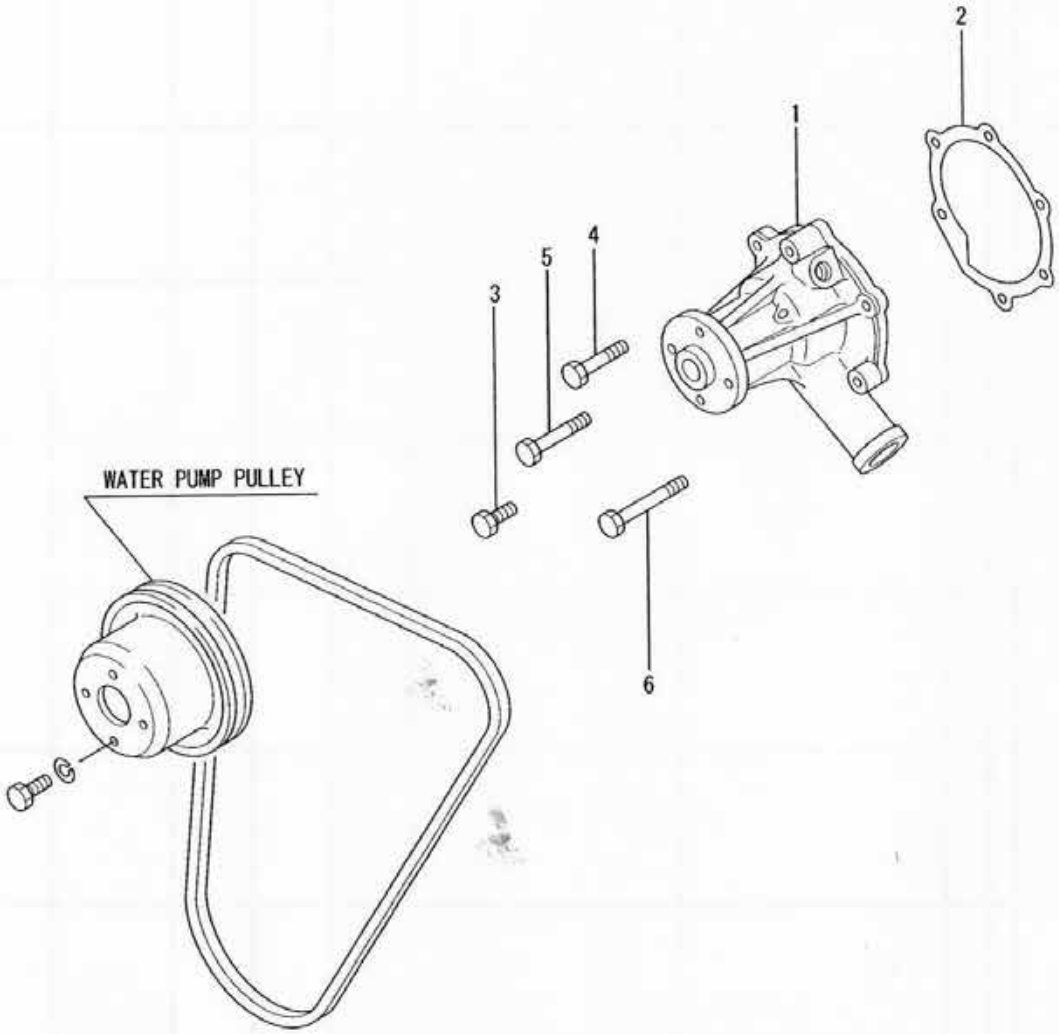
2
1
4
5
3
WATER PUMP PULLEY
6

REF. -NO.	PART NO.	R/P	SCENQG	PART NAME & DESCRIPTION		MODEL & QTY L3E			APPLICABLE SERIAL NO. FROM@-	-@UPTO	M/R	VRD
1	MM433-17001			PUMP ASSY, WATER		1						
2	30L45-05101			GASKET, WATER PUMP		1					A	
3	MF101228			BOLT		2					A	
4	MF101235			BOLT		1					A	
5	MF101238			BOLT		1					A	
6	MF101240			BOLT		2					A	

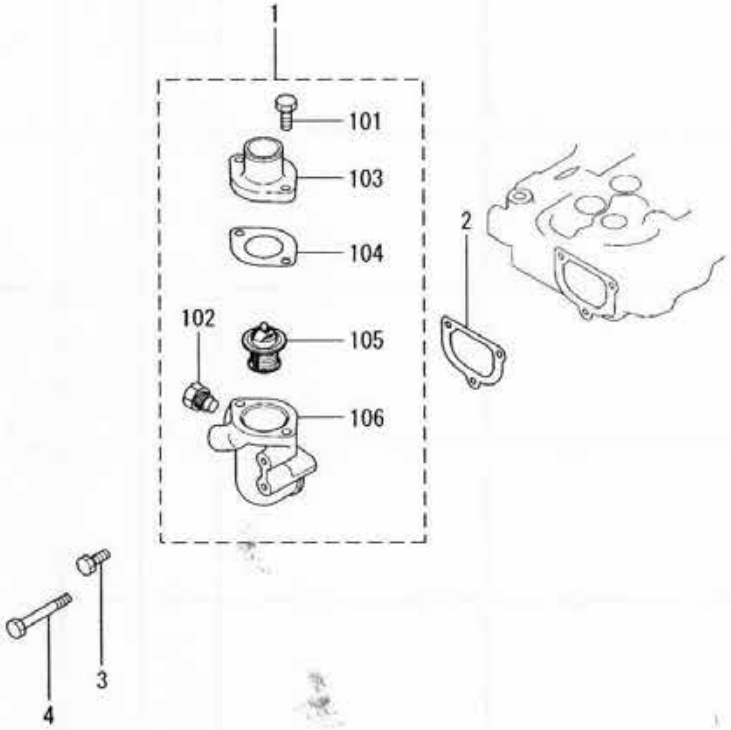
1
101
103
104
102
105
106
2
3
4

REF. -NO.		PART NO.	R/P	SCENQG	PART NAME & DESCRIPTION		MODEL & QTY L3E			APPLICABLE SERIAL NO. FROM@-	-@UPTO	M/R	VRD
1		*			THERMOSTAT ASSY		1						
1	01	MF101228			BOLT		2					A	
1	02	MM114-47302			PLUG		1						
1	03	30L46-05200			COVER, THERMOSTAT		1						
1	04	MM432-13503			GASKET, THERMOSTAT		1					A	
1	05	MM433-54801			THERMOSTAT		1						
1	06	30L46-04100			CASE, THERMOSTAT		1						
2		30L46-05100			GASKET		1					A	
3		MF101228			BOLT		2					A	
4		MF101241			BOLT		1					A	

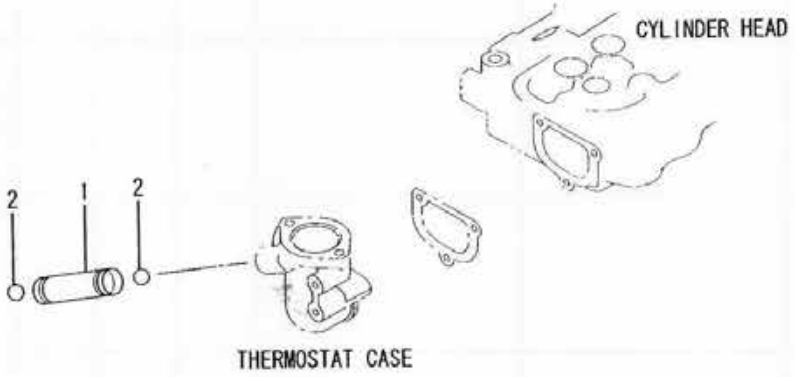
CYLINDER HEAD
2
1
2
THERMOSTAT CASE

REF. -NO.	PART NO.	R/P	SCENQG	PART NAME & DESCRIPTION		MODEL & QTY L3E			APPLICABLE SERIAL NO. FROM@-	-@UPTO	M/R	VRD
1	MM432083			PIPE, BYPASS		1						
2	MF520004			O-RING		2					A	

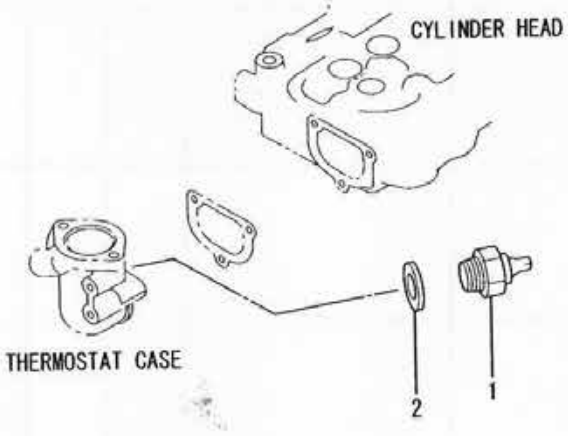
CYLINDER HEAD
THERMOSTAT CASE
2
1

REF. NO.	PART NO.	R/P	SCENQG	PART NAME & DESCRIPTION		MODEL & QTY L3E			APPLICABLE SERIAL NO. FROM@-	-@UPTO	M/R	VRD
1	MM432104			SWITCH ASSY, THERMO		1						
2	30636-25901			GASKET		1					A	

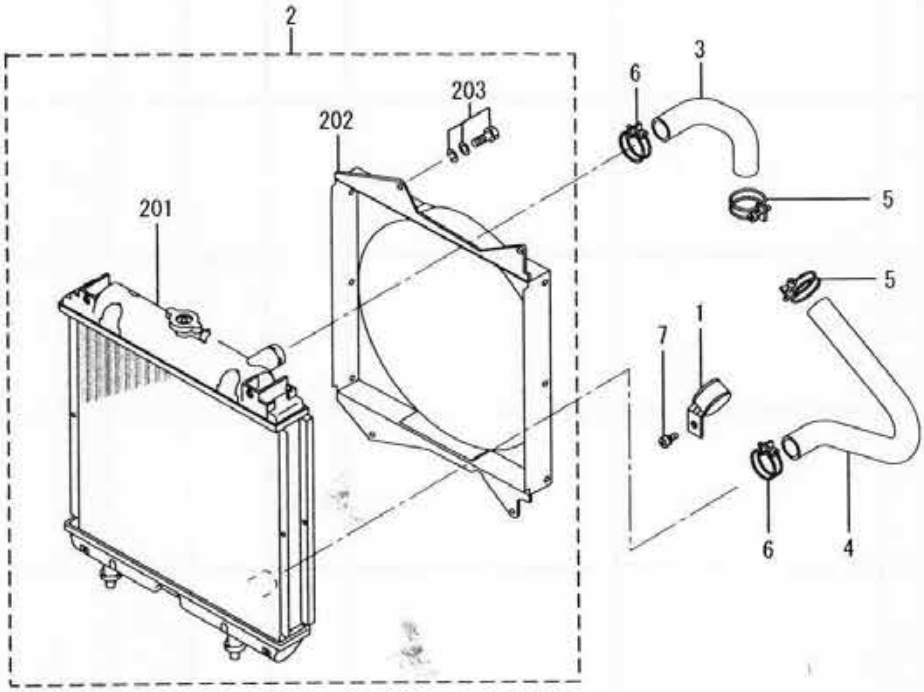
2
3
6
203
202
201
5
5
1
7
6
4

REF. -NO.		PART NO.	R/P	SCENQG	PART NAME & DESCRIPTION		MODEL & QTY L3E			APPLICABLE SERIAL NO. FROM@-	-@UPTO	M/R	VRD
1		MM434427			SUPPORT, HOSE		1						
2		30L47-05072			RADIATOR ASSY		1						
2	01	30L47-05051			RADIATOR		1						
2	02	30L47-17401			SHROUD		1						
2	03	F1825-06012			BOLT, W/WASHER	B/W	4					A	
3		30L47-06300			HOSE, WATER		1						
4		30L47-06400			HOSE, WATER		1						
5		MF661019			CLAMP, HOSE		2						
6		F4300-03701			CLAMP, HOSE		2					A	
7		MS350029			SCREW		1					A	

THIS PAGE IS NOT APPLICABEL. FOR CORRECT PART NO.REFER ATTACHED DRAWING NO. 30N96-02020

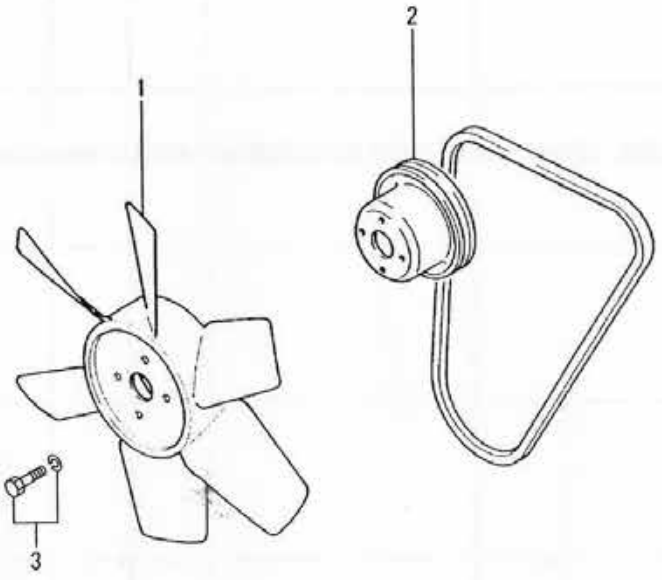
1
2
3

REF. -NO.	PART NO.	R/P	SCENQG	PART NAME & DESCRIPTION		MODEL & QTY L3E			APPLICABLE SERIAL NO. FROM@-	-@UPTO	M/R	VRD
1	MM405-43002			FAN, COOLING		1						
2	MM405460			PULLEY, WATER PUMP		1						
3	MF241223			BOLT, W/WASHER		4					A	

49 DRIVE BELT

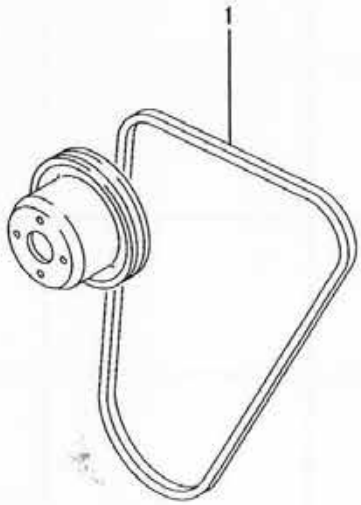

REF. -NO.		PART NO.	R/P	SCENQG	PART NAME & DESCRIPTION		MODEL & QTY L3E			APPLICABLE SERIAL NO. FROM@-	-@UPTO	M/R	VRD
1		30N49-00300			V-BELT		1					A	

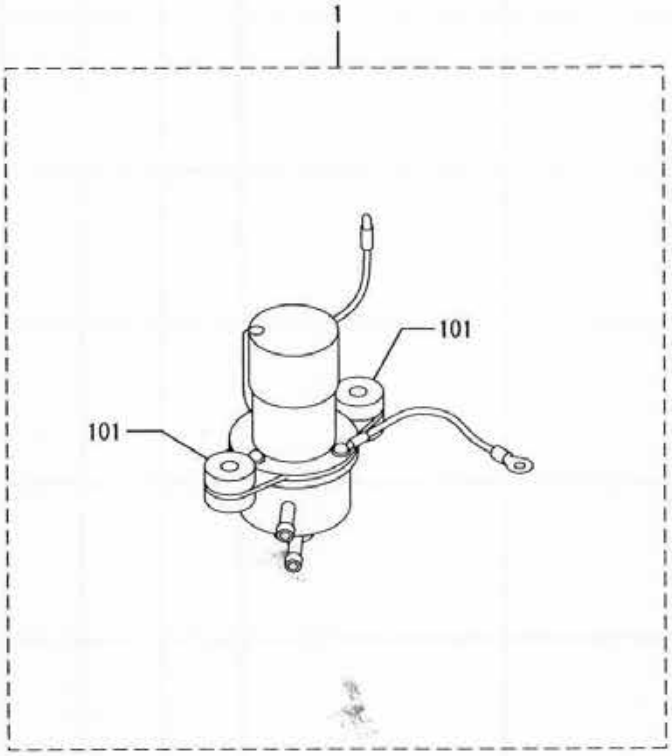
1
101
101

REF. -NO.		PART NO.	R/P	SCENQG	PART NAME & DESCRIPTION		MODEL & QTY L3E			APPLICABLE SERIAL NO. FROM@-	-@UPTO	M/R	VRD
1		30A60-00200			FUEL PUMP ASSY		1						
1	01	30A60-00500			MOUNT, RUBBER		2						
		THIS PAGE IS NOT APPLICABEL. FOR CORRECT PART NO.REFER ATTACHED DRAWING NO. 30N96-02030											

61 NOZZLE

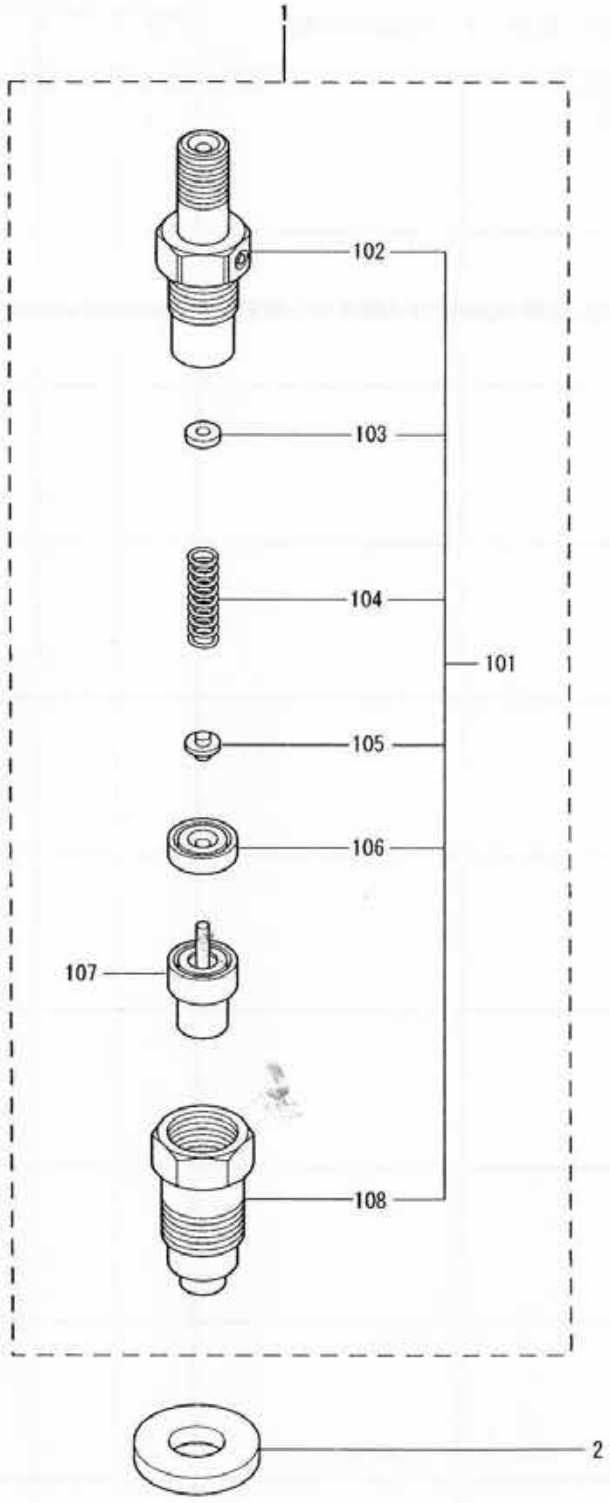

REF. -NO.		PART NO.	R/P	SCENQG	PART NAME & DESCRIPTION		MODEL & QTY L3E			APPLICABLE SERIAL NO. FROM@-	-@UPTO	M/R	VRD
1		31A61-01010			NOZZLE & HOLDER ASSY		3					A	
1	01	47X01-09600			HOLDER ASSY		3						
1	02	47X01-10000			BODY SUB ASSY		3						
1	03	MD603490			WASHER	T=1.25	AR					A	
		MD603491			WASHER	T=1.30	AR					A	
		MD603492			WASHER	T=1.35	AR					A	
		MD603493			WASHER	T=1.40	AR					A	
		MD603494			WASHER	T=1.45	AR					A	
		MD603495			WASHER	T=1.50	AR					A	
		MD603496			WASHER	T=1.55	AR					A	
		MD603497			WASHER	T=1.60	AR					A	
		MD603498			WASHER	T=1.65	AR					A	
		MD603499			WASHER	T=1.70	AR					A	
1	04	47X01-10100			SPRING, PRESSURE		3					A	
1	05	MM501838			PIN, PRESSURE		3						
1	06	MM501841			PIECE, DISTANCE		3						
1	07	47X01-09500			NOZZLE TIP ASSY		3					A	
1	08	MM514380			NUT, NOZZLE RETAINING		3						
2		MD070717			GASKET, NOZZLE		3					A	

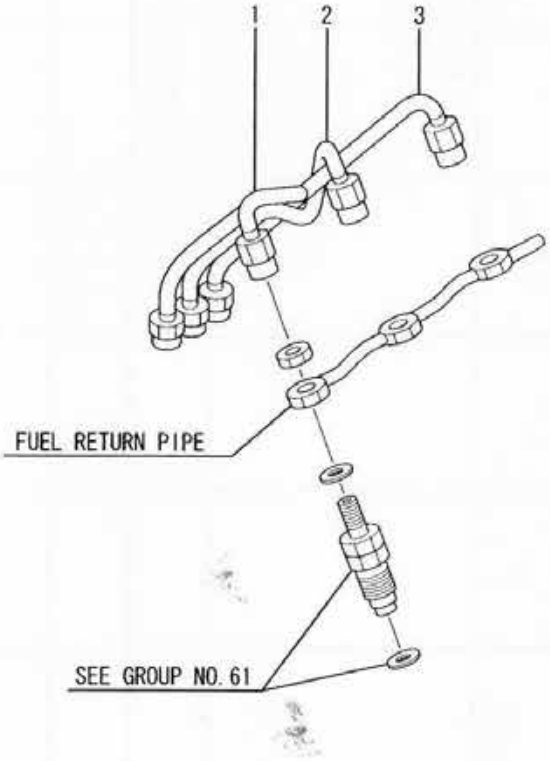
1
2
3
FUEL RETURN PIPE
SEE GROUP NO. 61

REF. -NO.	PART NO.	R/P	SCENQG	PART NAME & DESCRIPTION		MODEL & QTY L3E			APPLICABLE SERIAL NO. FROM@-	-@UPTO	M/R	VRD
1	30L61-07400			PIPE, INJECTION NO. 1		1						
2	30L61-07500			PIPE, INJECTION NO. 2		1						
3	30L61-07600			PIPE, INJECTION NO. 3		1						

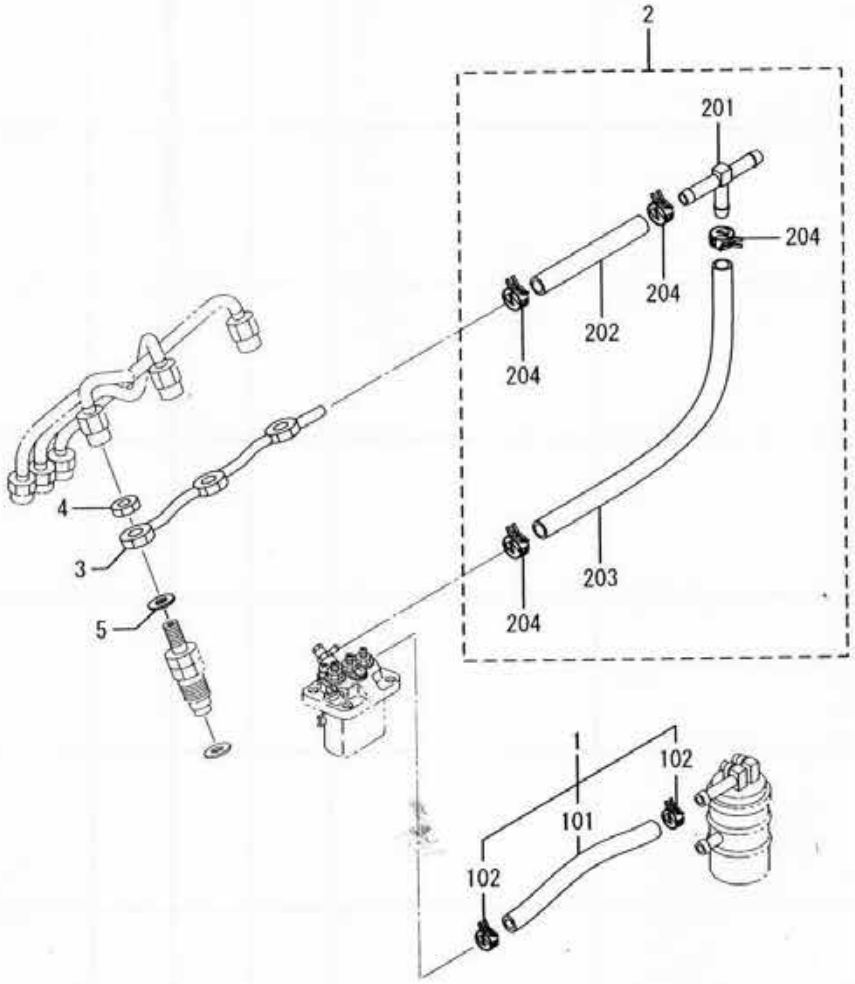
2
201
204
204
202
204
4
3
5
203
204
1
102
101
102

REF. -NO.		PART NO.	R/P	SENQG	PART NAME & DESCRIPTION		MODEL & QTY L3E			APPLICABLE SERIAL NO. FROM@-	-@UPTO	M/R	VRD
1		MM409336			HOSE ASSY, FUEL	Refer attached drawing no. 30N96-02020	1						
1	01	*			HOSE, FUEL		1						
1	02	MS660164			CLIP, HOSE		2					A	
2		30L61-20300			PIPE ASSY, FUEL		1						
2	01	31A61-01500			JOINT, THREE WAY		1						
2	02	MS604005			HOSE, FUEL		1						
2	03	MS604018			HOSE, FUEL		1						
2	04	MS660169			CLIP, HOSE		4					A	
3		MM433572			PIPE, FUEL RETURN		1						
4		MD068353			NUT		3					A	
5		MD068355			GASKET, FUEL RETURN		3					A	

62 FUEL FILTER

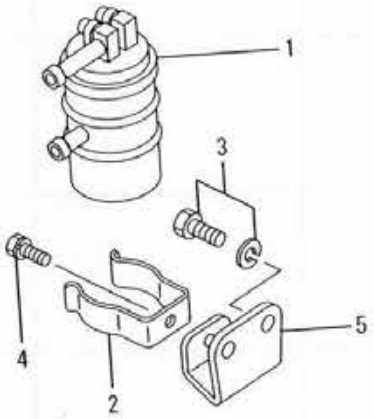

REF. -NO.	PART NO.	R/P	SCENQG	PART NAME & DESCRIPTION	MODEL & QTY L3E			APPLICABLE SERIAL NO. FROM@-	-@UPTO	M/R	VRD
1	MM435190			FILTER ASSY, FUEL	1					A	
2	MM400-88001			CLAMP, FILTER	1						
3	MF240051			BOLT, W/WASHER	2					A	
4	MF241223			BOLT, W/WASHER	1					A	
5	30L62-00300			SUPPORT, FUEL FILTER	1						

THIS PAGE IS NOT APPLICABEL. FOR CORRECT PART NO.REFER ATTACHED DRAWING NO. 30N96-02020

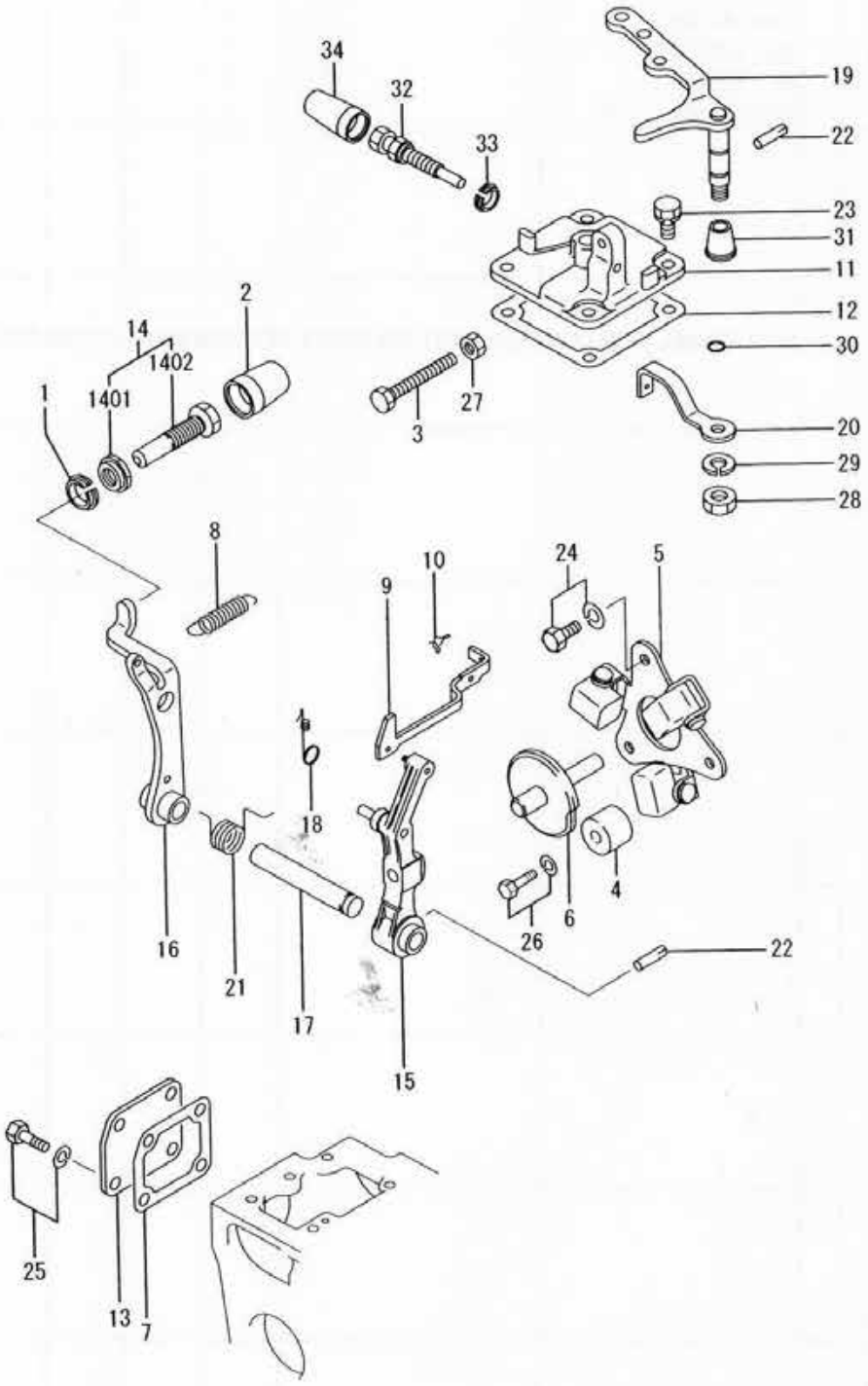
34
32
33
19
22
23
31
11
12
30
2
14
1402
1401
1
3
27
20
29
28
8
10
9
24
5
18
16
21
17
15
6
4
26
22
25
13
7

REF. -NO.		PART NO.	R/P	SCENQG	PART NAME & DESCRIPTION		MODEL & QTY L3E			APPLICABLE SERIAL NO. FROM@-	-@UPTO	M/R	VRD
1		30L63-00700			C-RING, TORQUE SET		1						
2		30L63-00800			COVER, TORQUE SET		1						
3		MM401080			BOLT, HIGH SPEED SET		1					A	
4		MM403988			STOPPER		1						
5		30L63-00050			WEIGHT ASSY, GOVERNOR		1						
6		MM430740			SHAFT ASSY, SLIDING		1						
7		30L63-05201			GASKET, TIE ROD COVER		1					A	
8		MM436-643			SPRING, GOVERNOR		1						
9		30L63-06100			ROD, TIE		1						
10		30L63-23700			SPRING, TIE ROD		1						
11		30L63-01500			COVER, GOVERNOR		1						
12		30L63-05101			GASKET, GOV. COVER		1					A	
13		MM433627			COVER, TIE ROD		1						
14		*			SCREW ASSY, RACK SET		1						
14	01	30L63-00600			NUT, TORQUE SET		1					A	
14	02	31A63-05601			SCREW, RACK SET		1					A	
15		MM434830			LEVER ASSY, GOVERNOR		1						
16		MM434832			LEVER ASSY, TENSION		1						
17		MM434872			SHAFT, GOVERNOR		1						
18		MM435-19801			SPRING, TIE ROD		1						
19		MM435889			LEVER ASSY, SPEED		1						
20		MM437431			LEVER, GOVERNOR		1						
21		MM437660			SPRING, START		1						
22		MM409239			PIN, GROOVED		2					A	
23		MF101225			BOLT		4					A	
24		MF241222			BOLT, W/WASHER		2					A	
25		MF241224			BOLT, W/WASHER		4					A	
26		MF241229			BOLT, W/WASHER		1					A	
27		MF430004			NUT		1					A	
28		MF430725			NUT, JAM		1					A	
29		MF450405			WASHER, SPRING		1					A	
30		MF520002			O-RING		1					A	
31		MM438721			COVER, GOVERNOR SHAFT		1					A	
32		30L63-00030			BOLT ASSY, HIGH SPEED		1						
33		30L63-12600			C-RING, HIGH SPEED		1						
34		30L63-02400			COVER, HIGH SPEED		1						

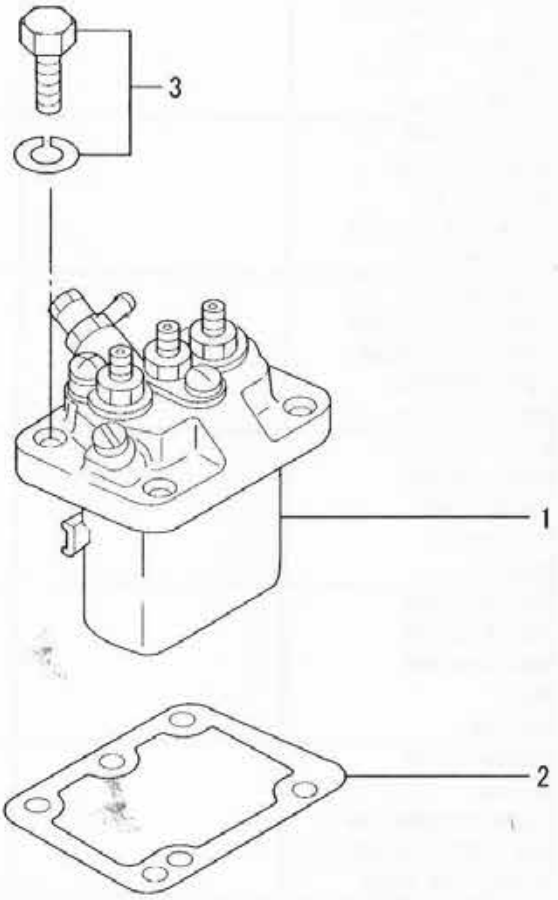
3
1
2

REF. -NO.	PART NO.	R/P	SCENQG	PART NAME & DESCRIPTION		MODEL & QTY L3E			APPLICABLE SERIAL NO. FROM@-	-@UPTO	M/R	VRD
1	30L65-02700			PUMP ASSY, FUEL INJ		1						
2	MM432222			SHIM, ADJUSTING	T=0.5	AR					A	
	MM432219			SHIM, ADJUSTING	T=0.2	AR					A	
	MM432220			SHIM, ADJUSTING	T=0.3	AR					A	
	MM433164			SHIM, ADJUSTING	T=0.4	AR					A	
	MM433165			SHIM, ADJUSTING	T=0.6	AR					A	
	MM433166			SHIM, ADJUSTING	T=0.7	AR					A	
	MM433167			SHIM, ADJUSTING	T=0.8	AR					A	
	MM433168			SHIM, ADJUSTING	T=0.9	AR					A	
	MM433169			SHIM, ADJUSTING	T=1.0	AR					A	
3	MF241228			BOLT, W/WASHER		4					A	

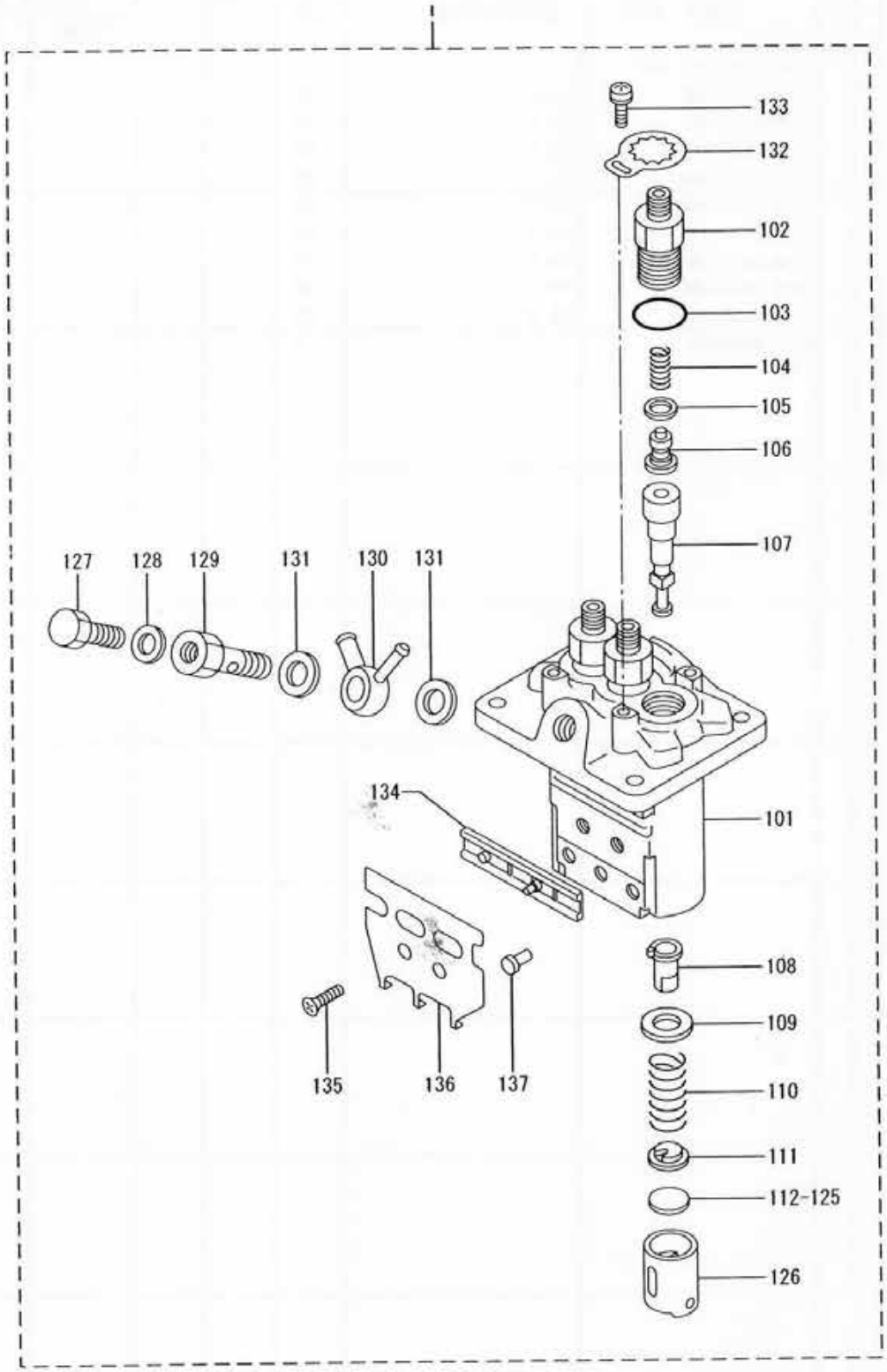
133
132
102
103
104
105
106
107
127
128
129
131
130
131
134
101
108
109
110
111
112-125
126
135
136
137

REF. -NO.		PART NO.	R/P	SCENQG	PART NAME & DESCRIPTION		MODEL & QTY L3E			APPLICABLE SERIAL NO. FROM@-	-@UPTO	M/R	VRD
1		30L65-02700			PUMP ASSY, FUEL INJ		1						
1	01	09011-03730			HOUSING SUB ASSY		1						
1	02	09013-00390			HOLDER, DELIVERY		3						
1	03	09013-90400			O-RING		3					A	
1	04	09013-60530			SPRING, DELIVERY		3						
1	05	09013-70130			GASKET, DELIVERY		3					A	
1	06	09014-02110			VALVE SUB ASSY		3						
1	07	09015-04280			ELEMENT SUB ASSY		3						
1	08	09016-00140			SLEEVE SUB ASSY		3						
1	09	09016-30140			SEAT, SPRING UPPER		3						
1	10	09016-40220			SPRING, PLUNGER		3					A	
1	11	09016-50170			SEAT, SPRING LOWER		3						
1	12	09031-10320			PLATE, TAPPET SHIM	T=1.85	AR					A	
1	13	09031-10330			PLATE, TAPPET SHIM	T=1.90	AR					A	
1	14	09031-10340			PLATE, TAPPET SHIM	T=1.95	AR					A	
1	15	09031-10350			PLATE, TAPPET SHIM	T=2.00	AR					A	
1	16	09031-10360			PLATE, TAPPET SHIM	T=2.05	AR					A	
1	17	09031-10370			PLATE, TAPPET SHIM	T=2.10	AR					A	
1	18	09031-10380			PLATE, TAPPET SHIM	T=2.15	AR					A	
1	19	09031-10390			PLATE, TAPPET SHIM	T=2.20	AR					A	
1	20	09031-10400			PLATE, TAPPET SHIM	T=2.25	AR					A	
1	21	09031-10410			PLATE, TAPPET SHIM	T=2.30	AR					A	
1	22	09031-10420			PLATE, TAPPET SHIM	T=2.35	AR					A	
1	23	09031-10430			PLATE, TAPPET SHIM	T=2.40	AR					A	
1	24	09031-10440			PLATE, TAPPET SHIM	T=2.45	AR					A	
1	25	09031-10450			PLATE, TAPPETSHIM	T=2.50	AR						
1	26	09017-00220			TAPPET SUB ASSY		3						
1	27	09024-40010			SCREW, AIR BLEEDER		1						
1	28	09024-80010			WASHER, DRAIN SCREW		1						
1	29	09024-50310			SCREW, HOLLOW		1						
1	30	09221-70590			NIPPLE, SWIVEL		1						
1	31	09025-10010			WASHER, DRAIN UNION		2						
1	32	09023-00070			PLATE, LOCK		3						
1	33	94900-75390			SCREW, W/WASHER		3						
1	34	09021-00560			RACK ASSY, CONTROL		1						
1	35	94900-20500			SCREW, COUNTER SUNK		2						
1	36	09069-11020			BRACKET, STOP WIRE		1						
1	37	09018-30090			PIN, TAPPET GUIDE		3					A	

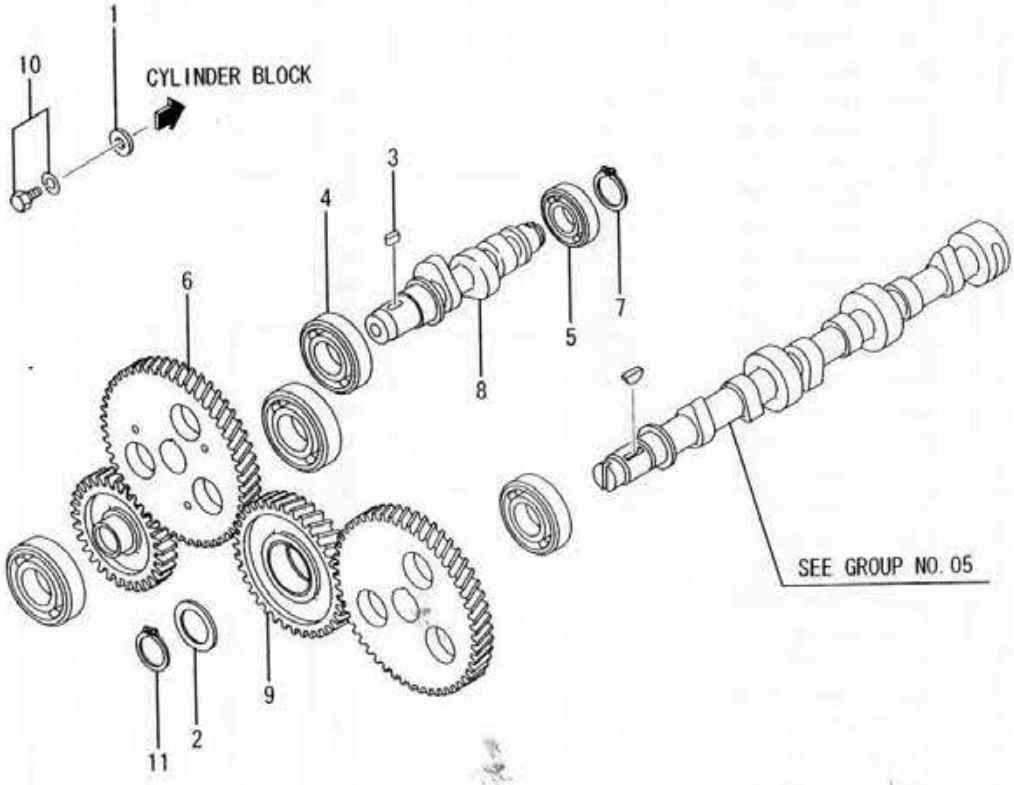
1
10
CYLINDER BLOCK
3
4
6
7
5
8
SEE GROUP NO. 05
9
2
11

REF. -NO.	PART NO.	R/P	SCENQG	PART NAME & DESCRIPTION		MODEL & QTY L3E			APPLICABLE SERIAL NO. FROM@-	-@UPTO	M/R	VRD
1	MM432306			WASHER, CAMSHAFT STOP		1					A	
2	MM432567			PLATE, DISTANCE		1						
3	MF476018			KEY, SUNK		1						
4	MM432105			BEARING, BALL		1					A	
5	MM432106			BEARING, BALL		1					A	
6	MM433127			GEAR, FUEL INJ PUMP	Z=52	1						
7	MF522007			RING, SNAP		1					A	
8	MM435144			SHAFT, FUEL INJ PUMP		1						
9	MM433236			GEAR ASSY, IDLER	Z=40	1						
10	MF241223			BOLT, W/WASHER		1					A	
11	MF522011			RING, SNAP		1					A	

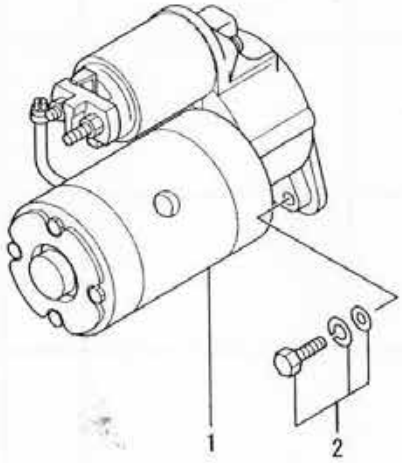
1
2

REF. -NO.	PART NO.	R/P	SCENQG	PART NAME & DESCRIPTION		MODEL & QTY L3E			APPLICABLE SERIAL NO. FROM@-	-@UPTO	M/R	VRD
1	30L66-10500			STARTER ASSY		1						
2	MF244855			BOLT, W/WASHER		1					A	

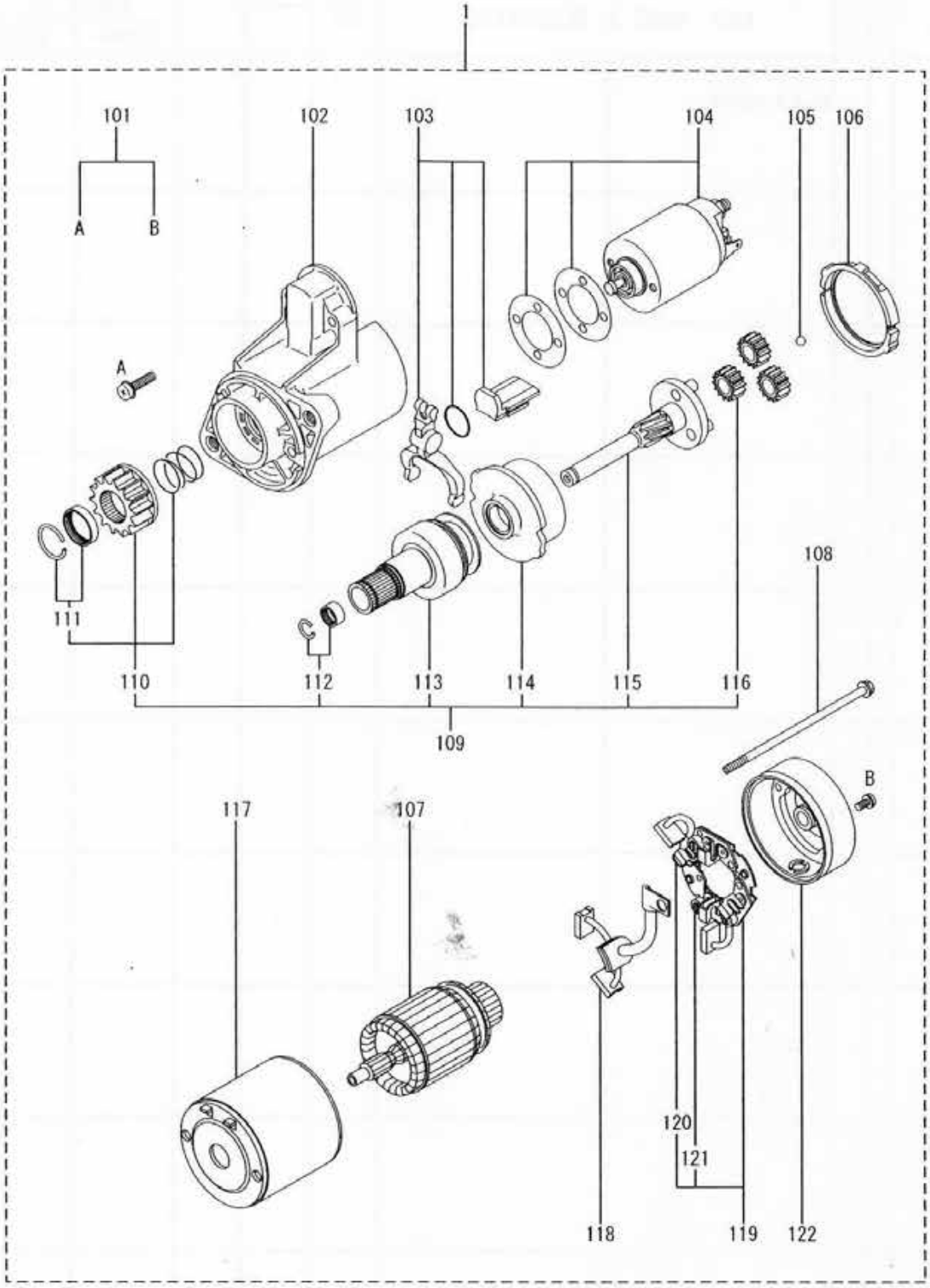
1
101
A
B
102
103
104
105
106
A
111
110
112
113
114
115
116
109
108
B
117
107
118
119
120
121
122

REF. -NO.		PART NO.	R/P	SCENQG	PART NAME & DESCRIPTION		MODEL & QTY L3E			APPLICABLE SERIAL NO. FROM@-	-@UPTO	M/R	VRD
1		30L66-10500			STARTER ASSY		1						
1	01	47X11-02237			SCREW SET		1						
1	02	47X11-02334			BRACKET ASSY, FRONT		1						
1	03	47X11-02335			LEVER SET		1						
1	04	47X11-02319			SWITCH ASSY		1						
1	05	47X11-02213			BALL		1						
1	06	47X11-02320			PACKING SET		1						
1	07	47X11-02239			ARMATURE SET		1						
1	08	47X11-02246			BOLT SET		1						
1	09	47X11-02329			SHAFT ASSY, CLUTCH		1						
1	10	47X11-02331			PINION SET		1						
1	11	47X11-02233			STOPPER SET		1						
1	12	47X11-02333			STOPPER SET		1						
1	13	47X11-02330			CLUCTH, OVER RUNNING		1						
1	14	47X11-02290			GEAR ASSY, INTERNAL		1						
1	15	47X11-02228			SHAFT ASSY, GEAR		1						
1	16	47X11-02207			GEAR ASSY		3						
1	17	47X11-02336			YOKE ASSY		1						
1	18	47X11-02241			BRUSH ASSY		1						
1	19	47X11-02242			HOLDER ASSY, BRUSH		1						
1	20	47X11-02243			SPRING, BRUSH		2						
1	21	47X11-02244			SPRING, BRUSH		2						
1	22	47X11-02245			BRACKET ASSY, REAR		1						

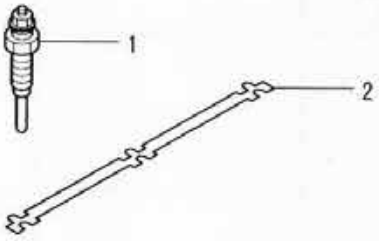
1
2

REF. -NO.	PART NO.	R/P	SCENQG	PART NAME & DESCRIPTION		MODEL & QTY L3E			APPLICABLE SERIAL NO. FROM@-	-@UPTO	M/R	VRD
1	30L66-00302			PLUG, GLOW		3					A	
2	MM433309			PLATE, GLOW PLUG		1						

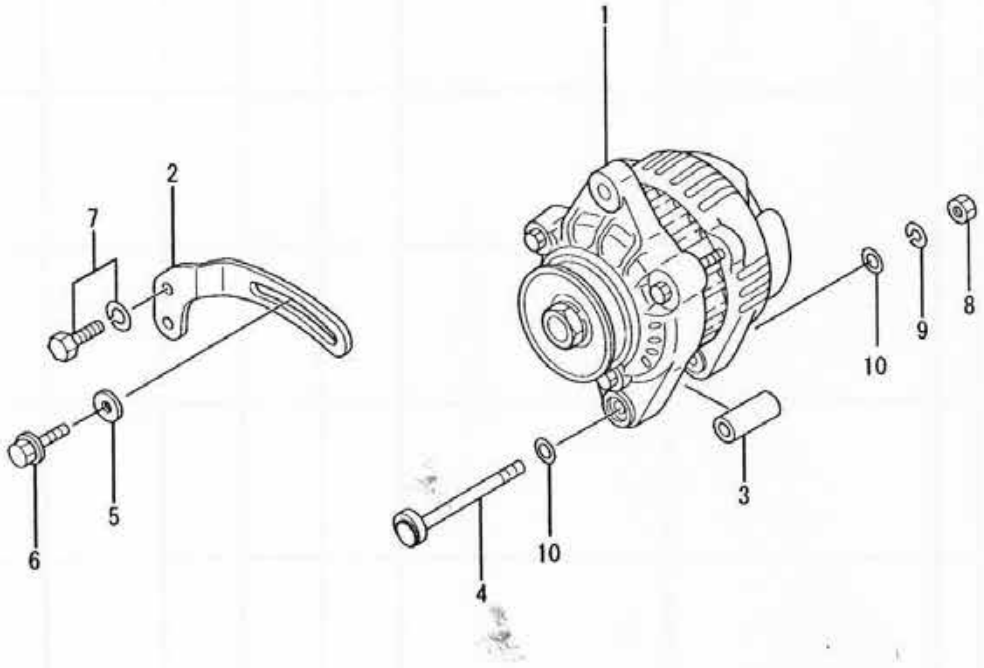
1
2
7
8
9
10
10
3
5
6
4

REF. -NO.	PART NO.	R/P	SCENQG	PART NAME & DESCRIPTION		MODEL & QTY L3E			APPLICABLE SERIAL NO. FROM@-	-@UPTO	M/R	VRD
1	30N68-01200			ALTERNATOR ASSY		1						
2	30N68-00800			BRACE, GENERATOR		1						
3	30N68-10900			WASHER		1					A	
4	30N68-01100			BOLT		1					A	
5	30N68-00300			WASHER		1					A	
6	30N68-00700			BOLT, FLANGE		1						
7	F1805-06014			BOLT, W/WASHER		1					A	
8	F2300-08000			NUT		1					A	
9	F2515-08000			WASHER, SPRING		1					A	
10	30N04-03200			WASHER, PLIAN		1					A	

68-00-02 ALTERNATOR(12V-40A)

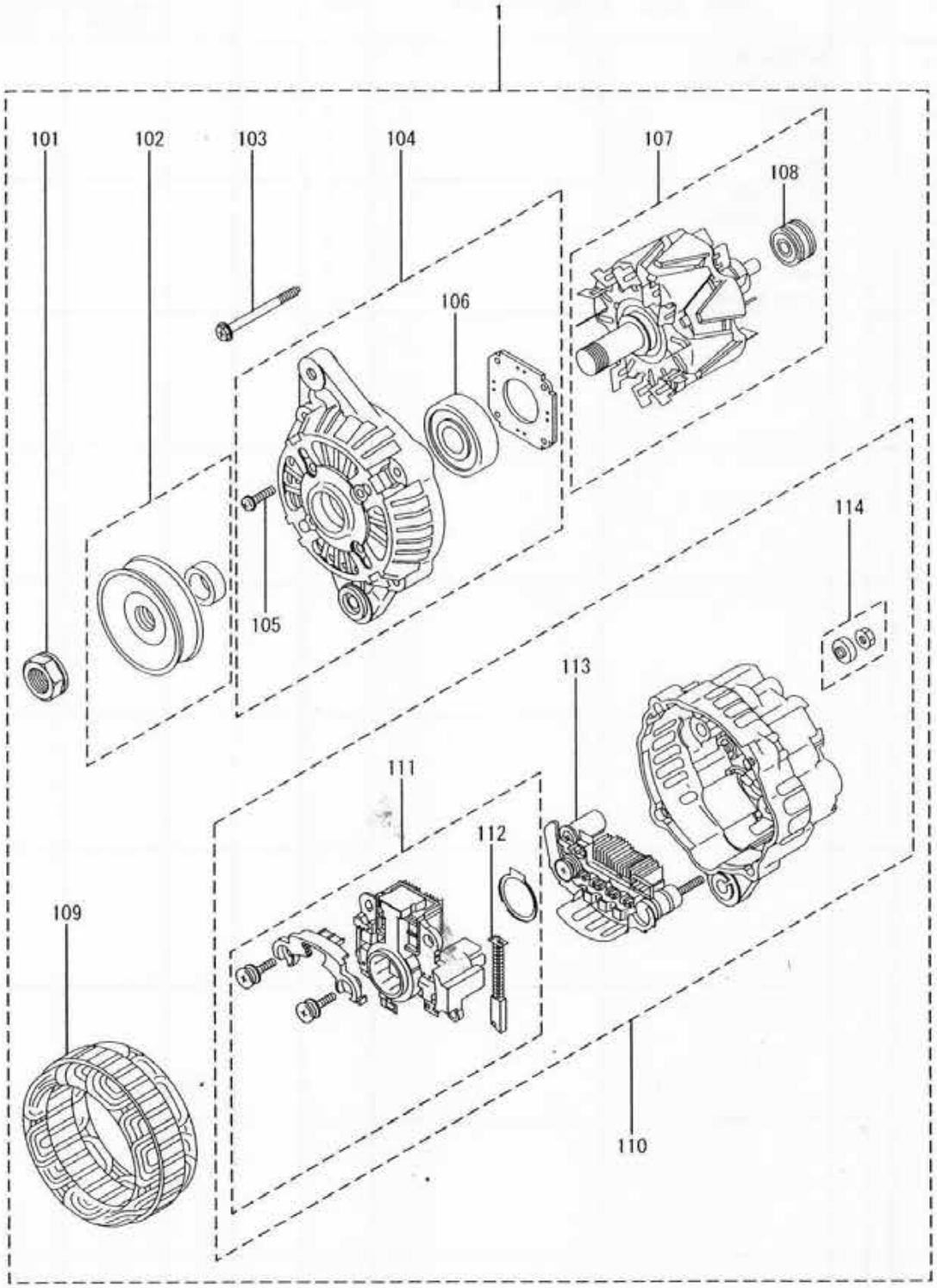

PARTS WITHOUT REF. NO. WILL NOT BE SUPPLIED.

REF. -NO.		PART NO.	R/P	SCENQG	PART NAME & DESCRIPTION		MODEL & QTY L3E			APPLICABLE SERIAL NO. FROM@-	-@UPTO	M/R	VRD
1		30A68-00801			ALTERNATOR ASSY		1						
1	01	MM502565			NUT		1					A	
1	02	MM502578			PULLEY ASSY		1						
1	03	MM502566			BOLT SET		1						
1	04	47X11-02295			BRACKET ASSY, FRONT		1						
1	05	MM502568			SCREW SET		1					A	
1	06	47X11-02296			BEARING, FRONT		1					A	
1	07	47X11-02301			ROTOR ASSY		1						
1	08	MM502571			BEARING, REAR		1					A	
1	09	MM502591			STARTOR ASSY		1						
1	10	MM502598			BRACKET ASSY, REAR		1						
1	11	47X11-02304			REGULATOR SET		1						
1	12	MM502577			BRUSH SET		2						
1	13	MM502599			RECTIFIER ASSY		1						
1	14	MM502588			NUT SET		1					A	

THIS PAGE IS NOT APPLICABLE.

87 SPEED CONTROL

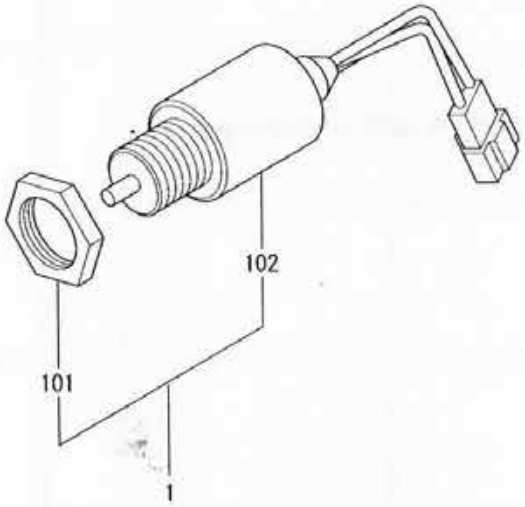

REF. -NO.		PART NO.	R/P	SCENQG	PART NAME & DESCRIPTION		MODEL & QTY L3E			APPLICABLE SERIAL NO. FROM@-	-@UPTO	M/R	VRD
1		30A87-10042			SOLENOID & NUT SET		1						
1	01	MM409671			NUT		1					A	
1	02	30A87-20402			SOLENOID ASSY		1						

97 OVERHAUL GASKET KIT

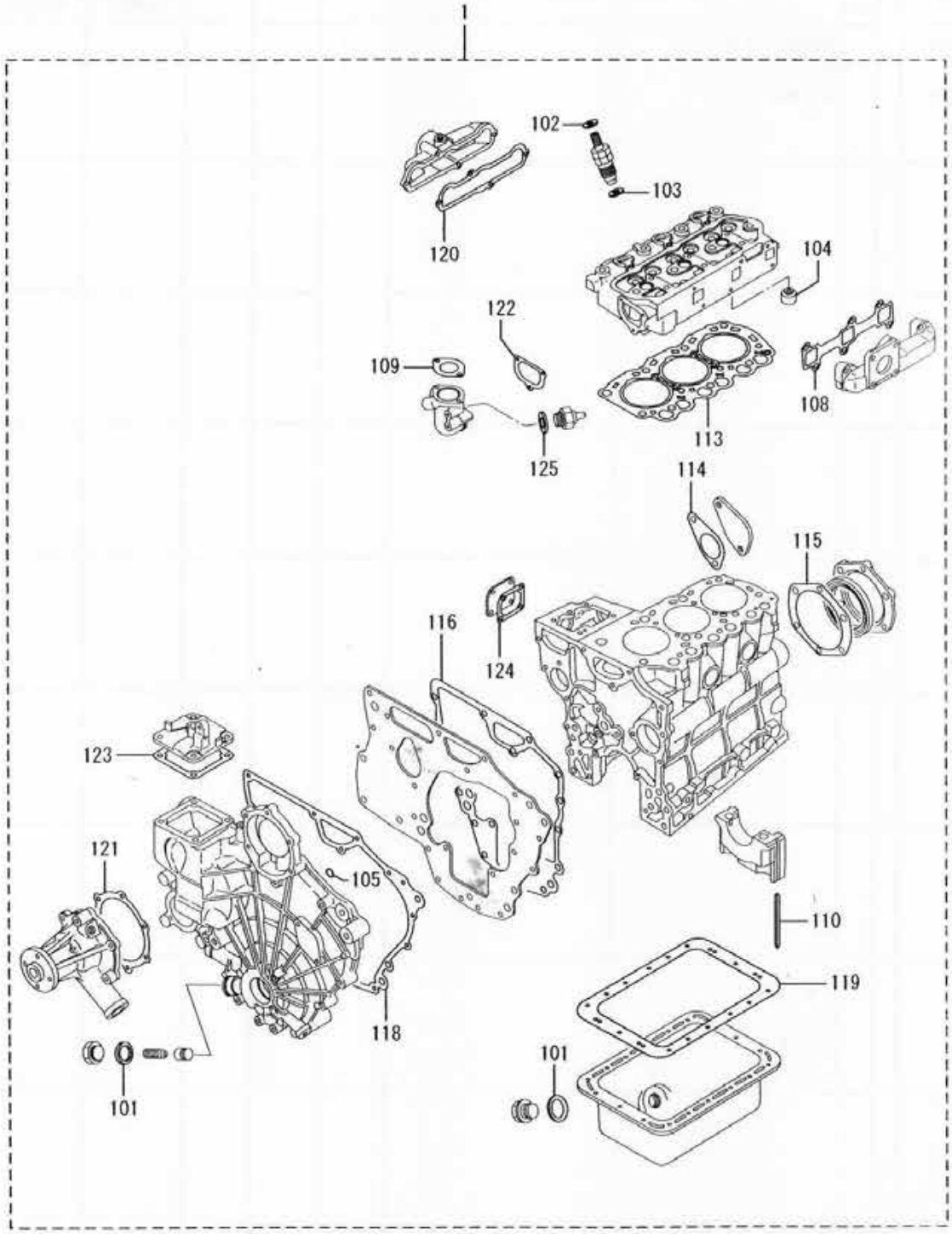

REF. -NO.		PART NO.	R/P	SCENQG	PART NAME & DESCRIPTION		MODEL & QTY L3E			APPLICABLE SERIAL NO. FROM@-	-@UPTO	M/R	VRD
1		30L94-06032			GASKET KIT		1						
1	01	MD000312			GASKET, OIL DRAIN		2					A	
1	02	MD068355			GASKET, FUEL RETURN		3					A	
1	03	MD070717			GASKET, HOLDER		3					A	
1	04	MD115472			SEAL, VALVE STEM		6					A	
1	05	MF520007			O-RING		2					A	
1	06	MM404878			O-RING, FILTER CUP	NOT SHOWN	1					A	
1	07	MM404881			O-RING, ELEMENT	NOT SHOWN	1					A	
1	08	MM432-12901			GASKET, EXHAUST		1					A	
1	09	MM432-13502			GASKET, THERMOSTAT		1					A	
1	10	MM432214			SEAL, SIDE		4					A	
1	11	30A11-00101			GASKET, O/PUMP COVER	NOT SHOWN	1					A	
1	12	30A30-00100			GASKET	NOT SHOWN	1					A	
1	13	30L01-01102			GASKET, CYLINDER HEAD		1					A	
1	14	30L07-05101			GASKET		1					A	
1	15	30L07-05201			GASKET, OIL SEAL CASE		1					A	
1	16	30L07-05300			GASKET, FRONT PLATE		1					A	
1	17	30L11-01201			GASKET, HOUSING	NOT SHOWN	1					A	
1	18	30L11-05101			GASKET, GEAR CASE		1					A	
1	19	30L13-05200			GASKET, OIL PAN		1					A	
1	20	30L30-05201			GASKET, INTAKE		1					A	
1	21	30L45-05101			GASKET, WATER PUMP		1					A	
1	22	30L46-05100			GASKET, THERMO CASE		1					A	
1	23	30L63-05101			GASKET, GOV COVER		1					A	
1	24	30L63-05201			GASKET, TIE-ROD COVER		1					A	
1	25	30636-25901			GASKET		1					A	

NUMERICAL PARTS INDEX

PART NO.	GRP NO.	PAGE	REF-NO.		PART NO.	GRP NO.	PAGE	REF-NO.		PART NO.	GRP NO.	PAGE	REF-NO.	
F1825-06012	47-01	53	2	03	MF101235	45	45	4		MF522003	04	5	4	
F2305-06000	04	5	3		MF101238	30	31	8		MF522007	65-02	75	7	
F2460-06000	04-02	7	3		MF101238	45	45	5		MF522011	65-02	75	11	
F4300-03701	47-01	53	6		MF101240	11	15	6		MF661019	47-01	53	5	
F4300-04701	30-03	33	4		MF101240	45	45	6		MF665510	07	11	9	
F4300-05701	30-03	33	3		MF101241	46	47	4		MF665536	01	3	2	04
MD000269	07	11	22		MF101242	11	15	7		MF665538	07	11	3	02
MD000312	11	15	2	01	MF101257	30	31	9		MM114-47302	46	47	1	02
MD000312	13	19	1	02	MF101267	04	5	18		MM318306	01	3	2	05
MD000312	97	89	1	01	MF140026	68-00-01	83	6		MM318768	04	5	5	
MD000318	13	19	1	03	MF240051	01	3	6		MM318772	04	5	6	
MD000427	01	3	2	03	MF240051	07	11	24		MM400-88001	62	67	2	
MD000427	07	11	3	01	MF240051	11	15	9		MM401080	63	69	3	
MD000704	19	25	1	03	MF240051	62	67	3		MM401322	30-03	33	5	
MD000705	19	25	1	04	MF241222	63	69	24		MM403988	63	69	4	
MD001402	11	15	2	02	MF241223	05	9	6		MM404878	97	89	1	06
MD001404	11	15	2	03	MF241223	13	19	3		MM404881	97	89	1	07
MD001515	68-00-01	83	4		MF241223	48	55	3		MM405-43002	48	55	1	
MD001521	68-00-01	83	5		MF241223	62	67	4		MM405460	48	55	2	
MD008883	11	15	4		MF241223	65-02	75	10		MM409239	63	69	22	
MD016317	07	11	20		MF241224	07	11	25		MM409336	61-06	65	1	
MD016483	04	5	13		MF241224	11	15	8		MM409645	07	11	5	
MD020566	01	3	5		MF241224	63	69	25		MM409671	87	87	1	01
MD030629	21	29	1	02	MF241224	68-00-01	83	7		MM430613	07	11	7	
MD068353	61-06	65	4		MF241228	65-00-01	71	3		MM430740	63	69	6	
MD068355	61-06	65	5		MF241229	63	69	26		MM432065	07	11	17	
MD068355	97	89	1	02	MF241231	11	15	2	04	MM432083	46-02	49	1	
MD070717	61	61	2		MF241282	12	17	2		MM432104	46-04	51	1	
MD070717	97	89	1	03	MF244855	66-00-01	77	2		MM432105	05	9	2	
MD079696	49	57	1		MF401936	30	31	10		MM432105	65-02	75	4	
MD115472	04	5	14		MF430004	63	69	27		MM432106	65-02	75	5	
MD115472	97	89	1	04	MF430005	68-00-01	83	8		MM432-12501	01	3	4	
MD603490	61	61	1	03	MF430725	63	69	28		MM432-12901	30	31	6	
MD603491	61	61	1	03	MF430728	36	35	1	01	MM432-12901	97	89	1	08
MD603492	61	61	1	03	MF430845	20	27	4		MM432-13502	97	89	1	09
MD603493	61	61	1	03	MF450004	04-02	7	4		MM432-13503	46	47	1	04
MD603494	61	61	1	03	MF450009	20	27	5		MM432145	04	5	7	
MD603495	61	61	1	03	MF450405	04	5	19		MM432214	07	11	15	
MD603496	61	61	1	03	MF450405	63	69	29		MM432214	97	89	1	10
MD603497	61	61	1	03	MF450405	68-00-01	83	9		MM432219	65-00-01	71	2	
MD603498	61	61	1	03	MF450409	20	27	6		MM432220	65-00-01	71	2	
MD603499	61	61	1	03	MF472404	07	11	8		MM432222	65-00-01	71	2	
MF100083	14	21	1		MF476018	65-02	75	3		MM432235	11	15	1	
MF101225	63	69	23		MF476214	05	9	5		MM432237	30	31	3	
MF101228	07	11	23		MF476214	20	27	7		MM432239	01	3	1	
MF101228	30	31	7		MF520002	63	69	30		MM432306	05	9	1	
MF101228	45	45	3		MF520004	46-02	49	2		MM432306	65-02	75	1	
MF101228	46	47	1	01	MF520007	11	15	10		MM432567	65-02	75	2	
MF101228	46	47	3		MF520007	97	89	1	05	MM432677	07	11	1	
MF101235	11	15	5		MF520402	42	41	2	01	MM432887	20	27	3	

NUMERICAL PARTS INDEX

PART NO.	GRP NO.	PAGE	REF-NO.		PART NO.	GRP NO.	PAGE	REF-NO.		PART NO.	GRP NO.	PAGE	REF-NO.	
MM432890	05	9	4		MM438721	63	69	31		09024-80010	65-00-02	73	1	28
MM433115	07	11	6		MM438799	09	13	1		09025-10010	65-00-02	73	1	31
MM433120	42	41	3		MM438800	09	13	2		09031-10320	65-00-02	73	1	12
MM433127	65-02	75	6		MM438801	09	13	3		09031-10330	65-00-02	73	1	13
MM433133	04-02	7	1	03	MM501838	61	61	1	05	09031-10340	65-00-02	73	1	14
MM433-13901	30	31	2		MM501841	61	61	1	06	09031-10350	65-00-02	73	1	15
MM433164	65-00-01	71	2		MM502565	68-00-02	85	1	01	09031-10360	65-00-02	73	1	16
MM433165	65-00-01	71	2		MM502566	68-00-02	85	1	03	09031-10370	65-00-02	73	1	17
MM433166	65-00-01	71	2		MM502568	68-00-02	85	1	05	09031-10380	65-00-02	73	1	18
MM433167	65-00-01	71	2		MM502571	68-00-02	85	1	08	09031-10390	65-00-02	73	1	19
MM433168	65-00-01	71	2		MM502577	68-00-02	85	1	12	09031-10400	65-00-02	73	1	20
MM433169	65-00-01	71	2		MM502578	68-00-02	85	1	02	09031-10410	65-00-02	73	1	21
MM433-17001	45	45	1		MM502588	68-00-02	85	1	14	09031-10420	65-00-02	73	1	22
MM433-19702	05	9	3		MM502591	68-00-02	85	1	09	09031-10430	65-00-02	73	1	23
MM433236	65-02	75	9		MM502598	68-00-02	85	1	10	09031-10440	65-00-02	73	1	24
MM433300	01	3	2	06	MM502599	68-00-02	85	1	13	09031-10450	65-00-02	73	1	25
MM433301	01	3	2	07	MM514380	61	61	1	08	09069-11020	65-00-02	73	1	36
MM433-30601	04	5	12		MS350029	47-01	53	7		09221-70590	65-00-02	73	1	30
MM433307	04	5	17		MS450035	04	5	20		30636-25901	46-04	51	2	
MM433309	66-02	81	2		MS450035	68-00-01	83	10		30636-25901	97	89	1	25
MM433312	04	5	9		MS471101	07	11	10		30A11-00101	97	89	1	11
MM433353	11	15	2	05	MS471102	07	11	11		30A30-00100	97	89	1	12
MM433547	30	31	5		MS471105	07	11	12		30A40-00105	40	39	1	
MM433-54801	46	47	1	05	MS471107	07	11	13		30A60-00200	60-01	59	1	
MM433572	61-06	65	3		MS604005	61-06	65	2	02	30A60-00500	60-01	59	1	01
MM433627	63	69	13		MS604018	61-06	65	2	03	30A68-00801	68-00-01	83	1	
MM433651	68-00-01	83	2		MS660164	61-06	65	1	02	30A68-00801	68-00-02	85	1	
MM433709	43	43	1		MS660169	61-06	65	2	04	30A87-10042	87	87	1	
MM433713	17	23	4		MS661121	11	15	2	09	30A87-20402	87	87	1	02
MM433720	63	69	8		MS661140	01	3	7		30H42-04020	42	41	2	
MM433-77605	07	11	3		MS661140	11	15	2	10	30L01-01102	01	3	3	
MM433793	11	15	2	06	MS661141	07	11	14		30L01-01102	97	89	1	13
MM433794	11	15	2	07	05534-16000	12	17	3		30L01-21090	01	3	2	
MM433828	36	35	1		09011-03730	65-00-02	73	1	01	30L04-00071	04	5	2	
MM434222	04	5	16		09013-00390	65-00-02	73	1	02	30L04-02011	04-02	7	1	
MM434344	17	23	5		09013-60530	65-00-02	73	1	04	30L04-04500	04	5	21	
MM434345	17	23	6		09013-70130	65-00-02	73	1	05	30L04-14600	04	5	10	
MM434427	47-01	53	1		09013-90400	65-00-02	73	1	03	30L04-24700	04	5	11	
MM434466	11	15	2	08	09014-02110	65-00-02	73	1	06	30L05-01100	04	5	8	
MM434830	63	69	15		09015-04280	65-00-02	73	1	07	30L05-03700	04	5	15	
MM434832	63	69	16		09016-00140	65-00-02	73	1	08	30L07-00700	07	11	21	
MM434872	63	69	17		09016-30140	65-00-02	73	1	09	30L07-01100	07	11	3	05
MM435144	65-02	75	8		09016-40220	65-00-02	73	1	10	30L07-01200	07	11	16	
MM435190	62	67	1		09016-50170	65-00-02	73	1	11	30L07-01800	07	11	4	
MM435-19801	63	69	18		09017-00220	65-00-02	73	1	26	30L07-05101	07	11	2	
MM435-47801	30	31	1		09018-30090	65-00-02	73	1	37	30L07-05101	97	89	1	14
MM435889	63	69	19		09021-00560	65-00-02	73	1	34	30L07-05201	07	11	19	
MM437431	63	69	20		09023-00070	65-00-02	73	1	32	30L07-05201	97	89	1	15
MM437660	63	69	21		09024-40010	65-00-02	73	1	27	30L07-05300	07	11	18	
MM437789	13	19	1		09024-50310	65-00-02	73	1	29	30L07-05300	97	89	1	16

NUMERICAL PARTS INDEX

PART NO.	GRP NO.	PAGE	REF-NO.		PART NO.	GRP NO.	PAGE	REF-NO.		PART NO.	GRP NO.	PAGE	REF-NO.	
30L11-00034	11	15	2		30L65-02700	65-00-01	71	1						
30L11-01201	97	89	1	17	30L65-02700	65-00-02	73	1						
30L11-05101	11	15	3		30L66-00302	66-02	81	1						
30L11-05101	97	89	1	18	30L66-10500	66-00-01	77	1						
30L12-00700	12	17	1		30L66-10500	66-00-02	79	1						
30L13-05200	13	19	2		30L94-06032	97	89	1						
30L13-05200	97	89	1	19	31A04-00700	04	5	1						
30L17-10010	17	23	1		31A30-03020	30-03	33	1						
30L17-10020	17	23	2		31A30-03200	30-03	33	1	01					
30L17-10030	17	23	3		31A30-03301	30-03	33	2						
30L19-00031	19	25	1		31A30-03400	30-03	33	6						
30L19-02010	19	25	2		31A42-01300	42	41	1						
30L19-02020	19	25	3		31A61-01010	61	61	1						
30L19-02030	19	25	4		31A61-01500	61-06	65	2	01					
30L20-00501	20	27	1		31A63-05601	63	69	14	02					
30L20-01400	20	27	2		31A90-00601	36-04	37	1						
30L21-02030	21	29	1		47X01-09500	61	61	1	07					
30L21-03500	21	29	2		47X01-09600	61	61	1	01					
30L30-05201	30	31	4		47X01-10000	61	61	1	02					
30L30-05201	97	89	1	20	47X01-10100	61	61	1	04					
30L45-05101	45	45	2		47X11-02207	66-00-02	79	1	16					
30L45-05101	97	89	1	21	47X11-02213	66-00-02	79	1	05					
30L46-04100	46	47	1	06	47X11-02228	66-00-02	79	1	15					
30L46-05100	46	47	2		47X11-02233	66-00-02	79	1	11					
30L46-05100	97	89	1	22	47X11-02237	66-00-02	79	1	01					
30L46-05200	46	47	1	03	47X11-02239	66-00-02	79	1	07					
30L47-05051	47-01	53	2	01	47X11-02241	66-00-02	79	1	18					
30L47-05072	47-01	53	2		47X11-02242	66-00-02	79	1	19					
30L47-06300	47-01	53	3		47X11-02243	66-00-02	79	1	20					
30L47-06400	47-01	53	4		47X11-02244	66-00-02	79	1	21					
30L47-17401	47-01	53	2	02	47X11-02245	66-00-02	79	1	22					
30L61-07400	61-02	63	1		47X11-02246	66-00-02	79	1	08					
30L61-07500	61-02	63	2		47X11-02290	66-00-02	79	1	14					
30L61-07600	61-02	63	3		47X11-02295	68-00-02	85	1	04					
30L61-20300	61-06	65	2		47X11-02296	68-00-02	85	1	06					
30L62-00300	62	67	5		47X11-02301	68-00-02	85	1	07					
30L63-00030	63	69	32		47X11-02304	68-00-02	85	1	11					
30L63-00050	63	69	5		47X11-02319	66-00-02	79	1	04					
30L63-00600	63	69	14	01	47X11-02320	66-00-02	79	1	06					
30L63-00700	63	69	1		47X11-02329	66-00-02	79	1	09					
30L63-00800	63	69	2		47X11-02330	66-00-02	79	1	13					
30L63-01500	63	69	11		47X11-02331	66-00-02	79	1	10					
30L63-02400	63	69	34		47X11-02333	66-00-02	79	1	12					
30L63-05101	63	69	12		47X11-02334	66-00-02	79	1	02					
30L63-05101	97	89	1	23	47X11-02335	66-00-02	79	1	03					
30L63-05201	63	69	7		47X11-02336	66-00-02	79	1	17					
30L63-05201	97	89	1	24	91520-00700	68-00-01	83	3						
30L63-06100	63	69	9		94900-20500	65-00-02	73	1	35					
30L63-12600	63	69	33		94900-75390	65-00-02	73	1	33					
30L63-23700	63	69	10											

TABLE OF BOLT,W/WASHER

BOLT,W/WASHER	BOLT/WASHER	BOLT,W/WASHER	BOLT/WASHER	BOLT,W/WASHER	BOLT/WASHER
F1805-06010	F1035-06010 F2515-06000	F1805-06035	F1035-06035 F2515-06000	F1805-08018	F1035-08018 F2515-08000
F1805-06012	F1035-06012 F2515-06000	F1805-06040	F1035-06040 F2515-06000	F1805-08020	F1035-08020 F2515-08000
F1805-06014	F1035-06014 F2515-06000	F1805-06045	F1035-06045 F2515-06000	F1805-08022	F1035-08022 F2515-08000
F1805-06016	F1035-06016 F2515-06000	F1805-06055	F1035-06055 F2515-06000	F1805-08025	F1035-08025 F2515-08000
F1805-06018	F1035-06018 F2515-06000	F1805-06060	F1035-06060 F2515-06000	F1805-08030	F1035-08030 F2515-08000
F1805-06020	F1035-06020 F2515-06000	F1805-08012	F1035-08012 F2515-08000	F1805-08035	F1035-08035 F2515-08000
F1805-06025	F1035-06025 F2515-06000	F1805-08014	F1035-08014 F2515-08000	F1805-08040	F1035-08040 F2515-08000
F1805-06030	F1035-06030 F2515-06000	F1805-08016	F1035-08016 F2515-08000	F1805-08045	F1035-08045 F2515-08000

TABLE OF BOLT,W/WASHER

BOLT,W/WASHER	BOLT/WASHER	BOLT,W/WASHER	BOLT/WASHER	BOLT,W/WASHER	BOLT/WASHER
F1805-08050	F1035-08050 F2515-08000	F1805-10018	F1035-10018 F2515-10000	F1805-10050	F1035-10050 F2515-10000
F1805-08055	F1035-08055 F2515-08000	F1805-10020	F1035-10020 F2515-10000	F1805-10055	F1035-10055 F2515-10000
F1805-08060	F1035-08060 F2515-08000	F1805-10022	F1035-10022 F2515-10000	F1805-10060	F1035-10060 F2515-10000
F1805-08065	F1035-08065 F2515-08000	F1805-10025	F1035-10025 F2515-10000	F1805-10065	F1035-10065 F2515-10000
F1805-08070	F1035-08070 F2515-08000	F1805-10030	F1035-10030 F2515-10000	F1805-10070	F1035-10070 F2515-10000
F1805-08075	F1035-08075 F2515-08000	F1805-10035	F1035-10035 F2515-10000	F1805-10085	F1035-10085 F2515-10000
F1805-10014	F1035-10014 F2515-10000	F1805-10040	F1035-10040 F2515-10000	F1805-12016	F1035-12016 F2515-12000
F1805-10016	F1035-10016 F2515-10000	F1805-10045	F1035-10045 F2515-10000	F1805-12020	F1035-12020 F2515-12000

TABLE OF BOLT,W/WASHER

BOLT,W/WASHER	BOLT/WASHER
F1805-12025	F1035-12025
	F2515-12000
F1805-12030	F1035-12030
	F2515-12000
F1805-12035	F1035-12035
	F2515-12000
F1805-12040	F1035-12040
	F2515-12000
F1805-12045	F1035-12045
	F2515-12000
F1805-12050	F1035-12050
	F2515-12000
F1805-12055	F1035-12055
	F2515-12000
F1805-12060	F1035-12060
	F2515-12000

BOLT,W/WASHER	BOLT/WASHER
F1805-12065	F1035-12065
	F2515-12000
F1805-12085	F1035-12085
	F2515-12000
F1805-14035	F1035-14035
	F2515-14000
F1805-14045	F1035-14045
	F2515-14000

BOLT,W/WASHER	BOLT/WASHER
F1825-06010	F1035-06010
	F2515-06000
	F2500-06000
F1825-06012	F1035-06012
	F2515-06000
	F2500-06000
F1825-06014	F1035-06014
	F2515-06000
	F2500-06000
F1825-06016	F1035-06016
	F2515-06000
	F2500-06000
F1825-06020	F1035-06020
	F2515-06000
	F2500-06000
F1825-06025	F1035-06025
	F2515-06000
	F2500-06000

TABLE OF BOLT,W/WASHER

BOLT,W/WASHER	BOLT/WASHER	BOLT,W/WASHER	BOLT/WASHER	BOLT,W/WASHER	BOLT/WASHER
F1825-06030	F1035-06030	F1825-08025	F1035-08025	F1825-08050	F1035-08050
	F2515-06000		F2515-08000		F2515-08000
	F2500-06000		F2500-08000		F2500-08000
F1825-06035	F1035-06035	F1825-08030	F1035-08030	F1825-08055	F1035-08055
	F2515-06000		F2515-08000		F2515-08000
	F2500-06000		F2500-08000		F2500-08000
F1825-06055	F1035-06055	F1825-08035	F1035-08035	F1825-08085	F1035-08085
	F2515-06000		F2515-08000		F2515-08000
	F2500-06000		F2500-08000		F2500-08000
F1825-08012	F1035-08012	F1825-08038	F1035-08038	F1825-10014	F1035-10014
	F2515-08000		F2515-08000		F2515-10000
	F2500-08000		F2500-08000		F2500-10000
F1825-08016	F1035-08016	F1825-08040	F1035-08040	F1825-10016	F1035-10016
	F2515-08000		F2515-08000		F2515-10000
	F2500-08000		F2500-08000		F2500-10000
F1825-08020	F1035-08020	F1825-08045	F1035-08045	F1825-10020	F1035-10020
	F2515-08000		F2515-08000		F2515-10000
	F2500-08000		F2500-08000		F2500-10000

TABLE OF BOLT,W/WASHER

BOLT,W/WASHER	BOLT/WASHER
F1825-10025	F1035-10025
	F2515-10000
	F2500-10000
F1825-10030	F1035-10030
	F2515-10000
	F2500-10000
F1825-10035	F1035-10035
	F2515-10000
	F2500-10000
F1825-10040	F1035-10040
	F2515-10000
	F2500-10000
F1825-10080	F1035-10080
	F2515-10000
	F2500-10000
F1825-12020	F1035-12020
	F2515-12000
	F2500-12000

BOLT,W/WASHER	BOLT/WASHER
F1825-12025	F1035-12025
	F2515-12000
	F2500-12000
F1825-12030	F1035-12030
	F2515-12000
	F2500-12000
F1825-12040	F1035-12040
	F2515-12000
	F2500-12000

BOLT,W/WASHER	BOLT/WASHER
F2005-10016	F1155-10016
	F2515-10000
F2005-10020	F1155-10020
	F2515-10000
F2005-10025	F1155-10025
	F2515-10000
F2005-10030	F1155-10030
	F2515-10000
F2005-10035	F1155-10035
	F2515-10000
F2005-10040	F1155-10040
	F2515-10000
F2005-10045	F1155-10045
	F2515-10000
F2005-10050	F1155-10050
	F2515-10000

TABLE OF BOLT,W/WASHER

BOLT,W/WASHER	BOLT/WASHER
F2005-10055	F1155-10055
	F2515-10000
F2005-10060	F1155-10060
	F2515-10000
F2005-10065	F1155-10065
	F2515-10000
F2005-10070	F1155-10070
	F2515-10000
F2005-12020	F1155-12020
	F2515-12000
F2005-12025	F1155-12025
	F2515-12000
F2005-12030	F1155-12030
	F2515-12000
F2005-12035	F1155-12035
	F2515-12000

BOLT,W/WASHER	BOLT/WASHER
F2005-12040	F1155-12040
	F2515-12000
F2005-12045	F1155-12045
	F2515-12000
F2005-12050	F1155-12050
	F2515-12000
F2005-12055	F1155-12055
	F2515-12000
F2005-12065	F1155-12065
	F2515-12000

BOLT,W/WASHER	BOLT/WASHER
F2015-10020	F1155-10020
	F2515-10000
	F2500-10000
F2015-10025	F1155-10025
	F2515-10000
	F2500-10000
F2015-10030	F1155-10030
	F2515-10000
	F2500-10000
F2015-10035	F1155-10035
	F2515-10000
	F2500-10000
F2015-10040	F1155-10040
	F2515-10000
	F2500-10000
F2015-10050	F1155-10050
	F2515-10000
	F2500-10000

TABLE OF BOLT,W/WASHER

BOLT,W/WASHER	BOLT/WASHER	BOLT,W/WASHER	BOLT/WASHER	BOLT,W/WASHER	BOLT/WASHER
F2015-10055	F1155-10055				
	F2515-10000				
	F2500-10000				
F2015-10060	F1155-10060				
	F2515-10000				
	F2500-10000				
F2015-12025	F1155-12025				
	F2515-12000				
	F2500-12000				
F2015-12030	F1155-12030				
	F2515-12000				
	F2500-12000				

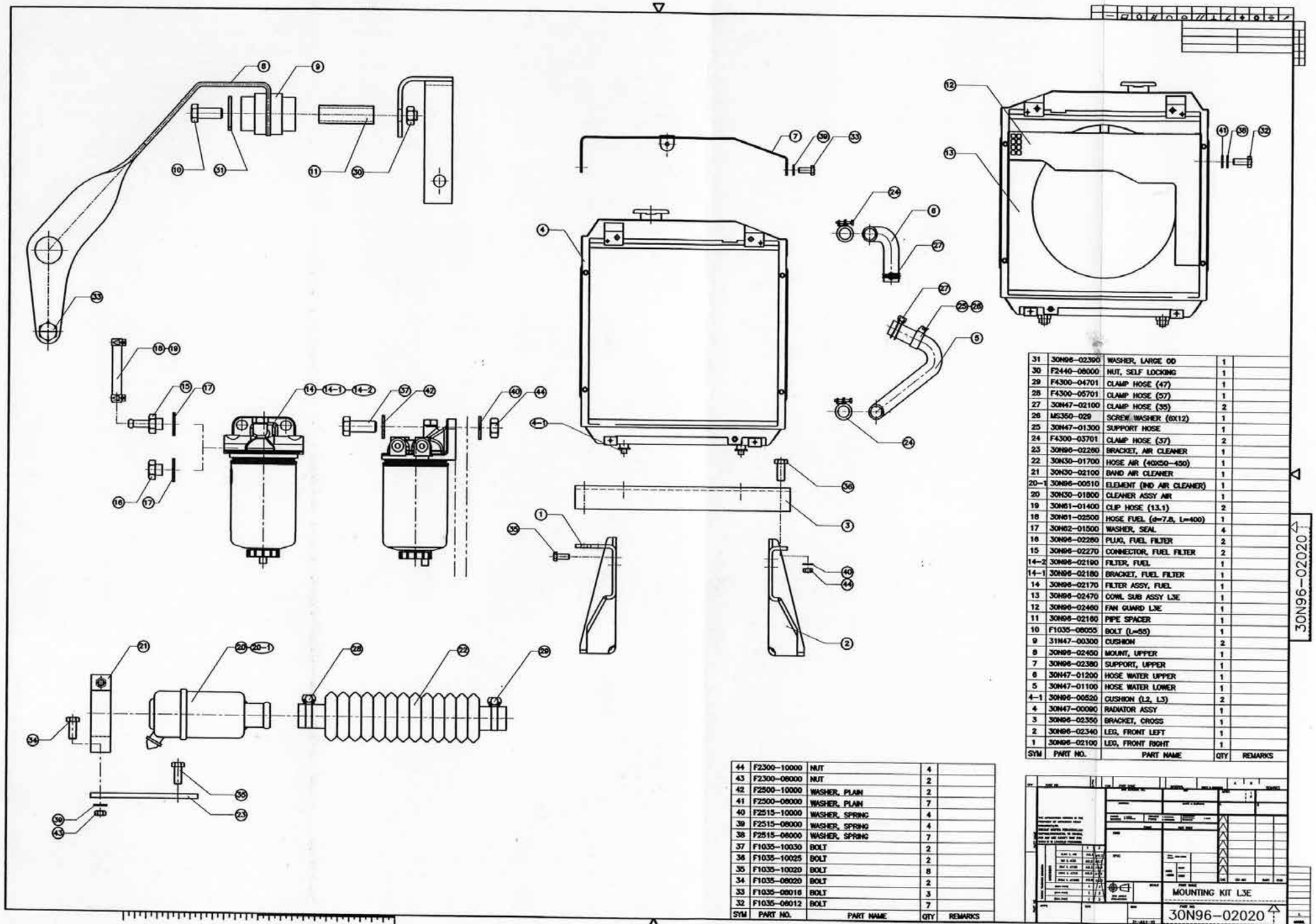

SYM	PART NO.	PART NAME	QTY	REMARKS
31	30N96-02390	WASHER, LARGE OD	1	
30	F2440-08000	NUT, SELF LOCKING	1	
29	F4300-04701	CLAMP HOSE (47)	1	
28	F4300-05701	CLAMP HOSE (57)	1	
27	30N47-02100	CLAMP HOSE (35)	2	
26	MS350-029	SCREW WASHER (6X12)	1	
25	30N47-01300	SUPPORT HOSE	1	
24	F4300-03701	CLAMP HOSE (37)	2	
23	30N96-02260	BRACKET, AIR CLEANER	1	
22	30N30-01700	HOSE AIR (40X50-450)	1	
21	30N30-02100	BAND AIR CLEANER	1	
20-1	30N96-00510	ELEMENT (IND AIR CLEANER)	1	
20	30N30-01800	CLEANER ASSY AIR	1	
19	30N61-01400	CLIP HOSE (13.1)	2	
18	30N61-02500	HOSE FUEL (d=7.8, L=400)	1	
17	30N62-01500	WASHER, SEAL	4	
16	30N96-02260	PLUG, FUEL FILTER	2	
15	30N96-02270	CONNECTOR, FUEL FILTER	2	
14-2	30N96-02190	FILTER, FUEL	1	
14-1	30N96-02180	BRACKET, FUEL FILTER	1	
14	30N96-02170	FILTER ASSY, FUEL	1	
13	30N96-02470	COWL SUB ASSY L3E	1	
12	30N96-02460	FAN GUARD L3E	1	
11	30N96-02160	PIPE SPACER	1	
10	F1035-08055	BOLT (L=55)	1	
9	31N47-00300	CUSHION	2	
8	30N96-02450	MOUNT, UPPER	1	
7	30N96-02380	SUPPORT, UPPER	1	
6	30N47-01200	HOSE WATER UPPER	1	
5	30N47-01100	HOSE WATER LOWER	1	
4-1	30N96-00520	CUSHION (L2, L3)	2	
4	30N47-00090	RADIATOR ASSY	1	
3	30N96-02350	BRACKET, CROSS	1	
2	30N96-02340	LEG, FRONT LEFT	1	
1	30N96-02100	LEG, FRONT RIGHT	1	

SYM	PART NO.	PART NAME	QTY	REMARKS
44	F2300-10000	NUT	4	
43	F2300-08000	NUT	2	
42	F2500-10000	WASHER, PLAIN	2	
41	F2500-08000	WASHER, PLAIN	7	
40	F2515-10000	WASHER, SPRING	4	
39	F2515-08000	WASHER, SPRING	4	
38	F2515-06000	WASHER, SPRING	7	
37	F1035-10030	BOLT	2	
36	F1035-10025	BOLT	2	
35	F1035-10020	BOLT	8	
34	F1035-08020	BOLT	2	
33	F1035-08016	BOLT	3	
32	F1035-06012	BOLT	7	

30N96-02020

MOUNTING KIT L3E

30N96-02020

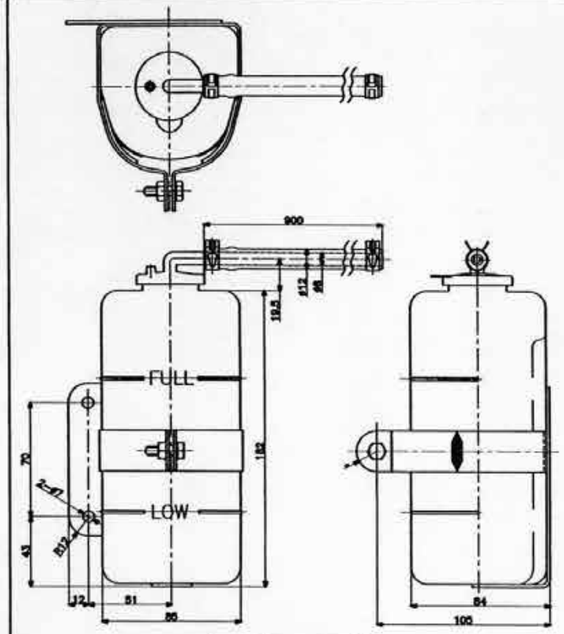

	WATER CAPACITY
FULL	600 CC
LOW	200 CC

TANK ASSY, RESERVOIR | 30N96-00100

①

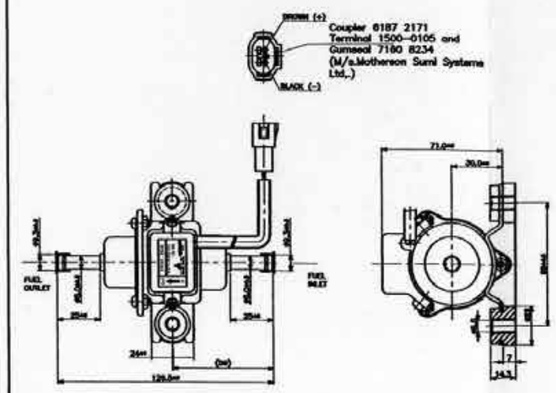

3. Vibration: less than 4.4G for all direction at mounting plate.
2. Pre filter is required less than 43 micron.

NOTE: 1. Pump mounting direction: Inlet & outlet pipes horizontaly.

SPECIFICATIONS

RATED VOLTAGE	DC 12 V
MAX. CURRENT	1.5 A MAX
PUMP DELIVERY	500 cc/min
SUCTION HEAD	-500 mm MAX
WEIGHT	450 g
WORKING TEMPERATURE RANGE	-30 ~ 60 °c
TOTAL PRESSURE (DELIVERY + SUCTION)	ZERO DELIVERY 24.0 kpa (0.3 kg) MAX

PUMP ASSY, FUEL | 30N60-20300

②

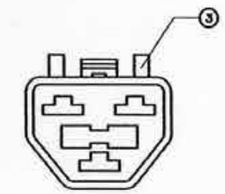

CONNECTOR
(FOR STOP SOLENOID)

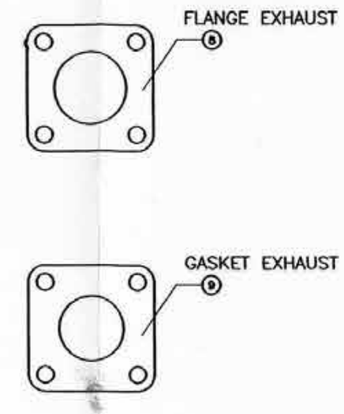

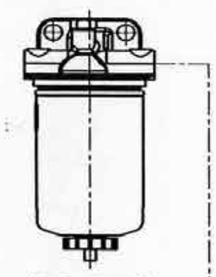

(FUEL FILTER)

RECOMMENDED FUEL LINE

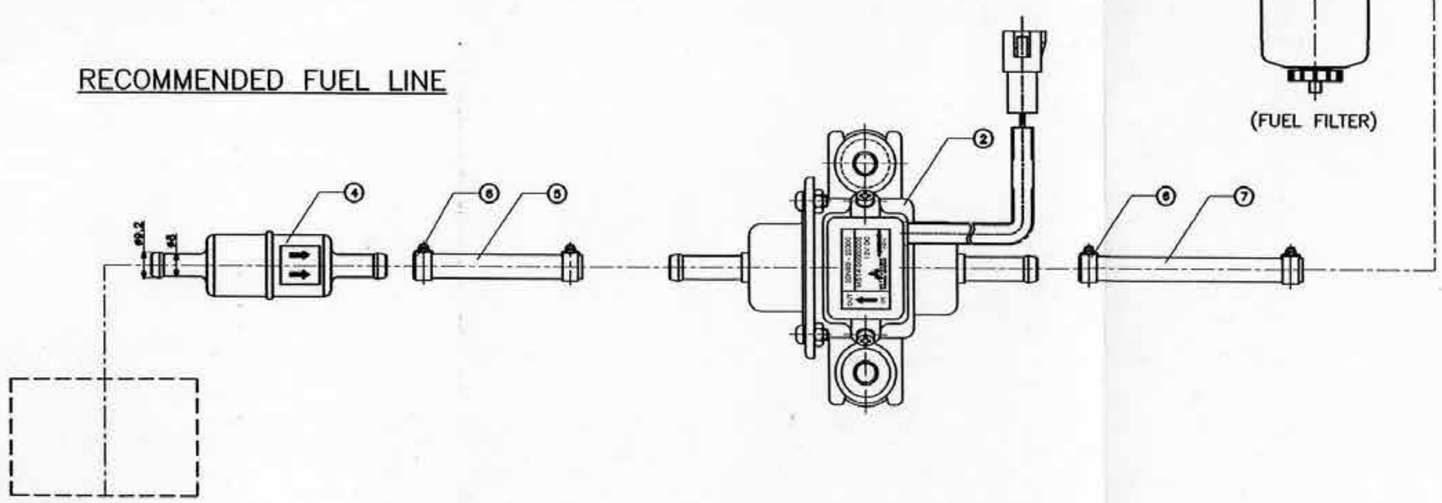

SYM	PART NO.	PART NAME	L3E	S3,4L	REMARKS
			QTY		
9	30N32-00400	GASKET EXHAUST		1	
9	30N32-00100	GASKET EXHAUST	1		
8	30N32-00300	FLANGE EXHAUST		1	
8	30N32-00200	FLANGE EXHAUST	1		
7	30N61-02500	HOSE FUEL (d=7.8, L=400)	1	1	
6	30N61-02400	CLAMP HOSE (16)	4	4	
5	30N61-03300	HOSE FUEL (d=7.8, L=150)	1	1	
4	30N62-00400	PRE FILTER	1	1	
3	30A87-00600	CONNECTOR	1	1	
2	30N60-20300	PUMP ASSY FUEL	1	1	
1	30N96-00100	TANK, RESERVIOR	1	1	

(30N96-02030)
30N96-02030

30N96-02040 LOOSE SUPPLY KIT ASS. 4L3

LOOSE SUPPLY KIT L3E

(30N96-02040)
30N96-02030

Printed in Japan

Pub.No. 98615-MW100